DB SERIES OUTLINE DIMENSIONS

Literature ID No. FT06-930
Revision 4

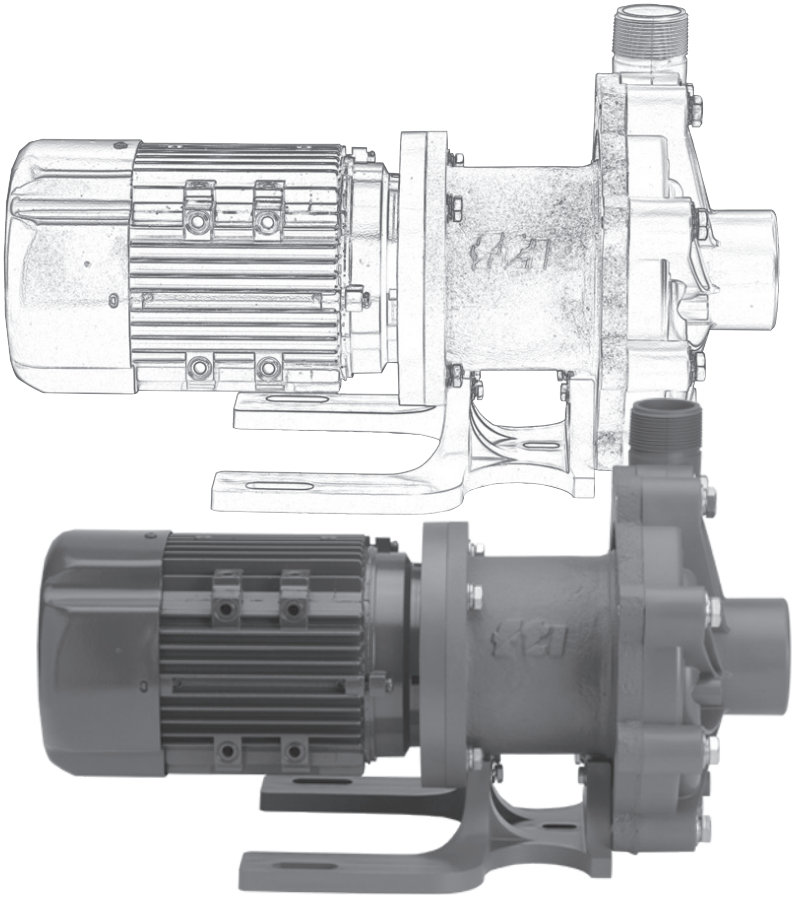

FINISH THOMPSON INC.
921 Greengarden Road • Erie, PA 16501-1591 U.S.A.
Ph 814-455-4478 • Fax 814-455-8518
Email fti@finishthompson.com • www.finishthompson.com

10/23/12

TABLE OF CONTENTS

Drawing **Page No.**

DB3/4/5/5.5 Outline Dimensions 3

DB6/6H/9 Outline Dimensions
- Threaded 4
- Union 5
- Flanged 6

DB8 Outline Dimensions
- Threaded 7
- Union 8
- Flanged 9

DB7/10 Outline Dimensions
- Threaded 10
- Union 11
- Flanged 12

DB11/15 Outline Dimensions
- Threaded 13
- Union 14
- Flanged 15

DB11/15 Outline Dimensions 80/90 FR B5
- Threaded 16
- Union 17
- Flanged 18

DB11/15 Outline Dimensions 100/112 FR B5
- Threaded 19
- Union 20
- Flanged 21

DB22 Outline Dimensions
- Threaded 22
- Union 23
- Flanged 24

DB3/4/5/5.5 Outline Dimensions - Threaded Housing (R100531)

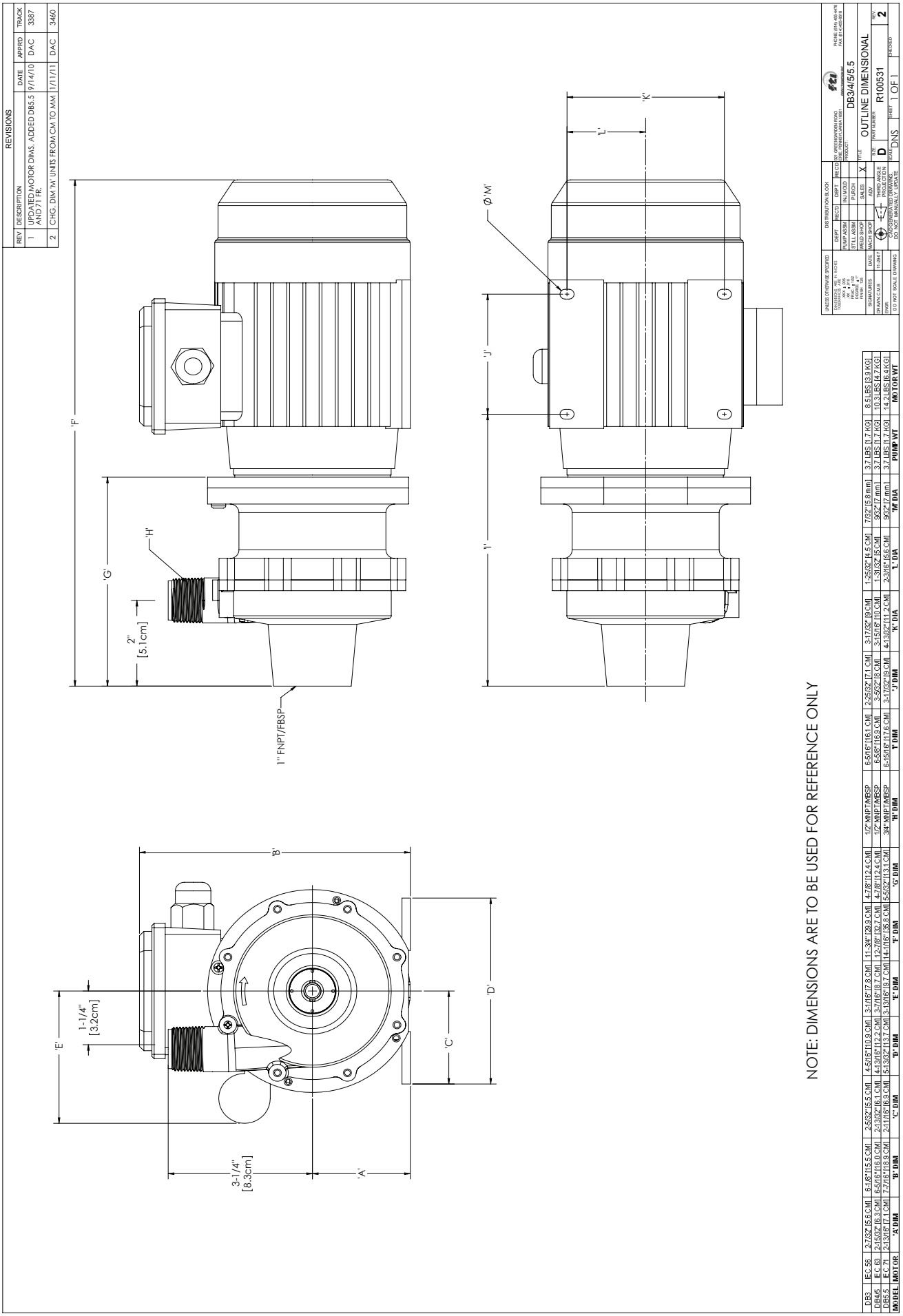

DB6/6H/9 Outline Dimensions - Threaded Housing (R100503)

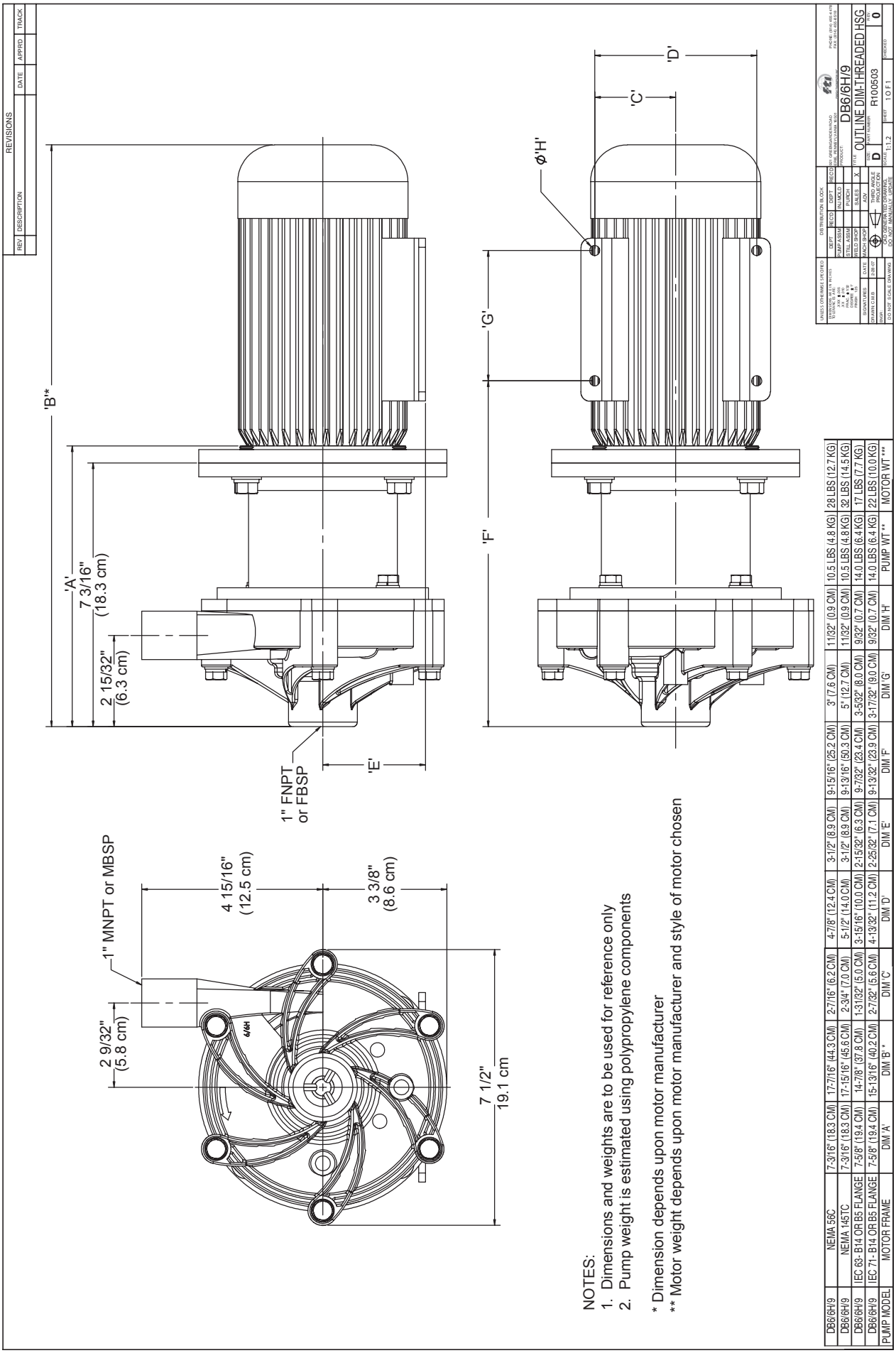

DB6/6H/9 Outline Dimensions - Union Housing (R100504)

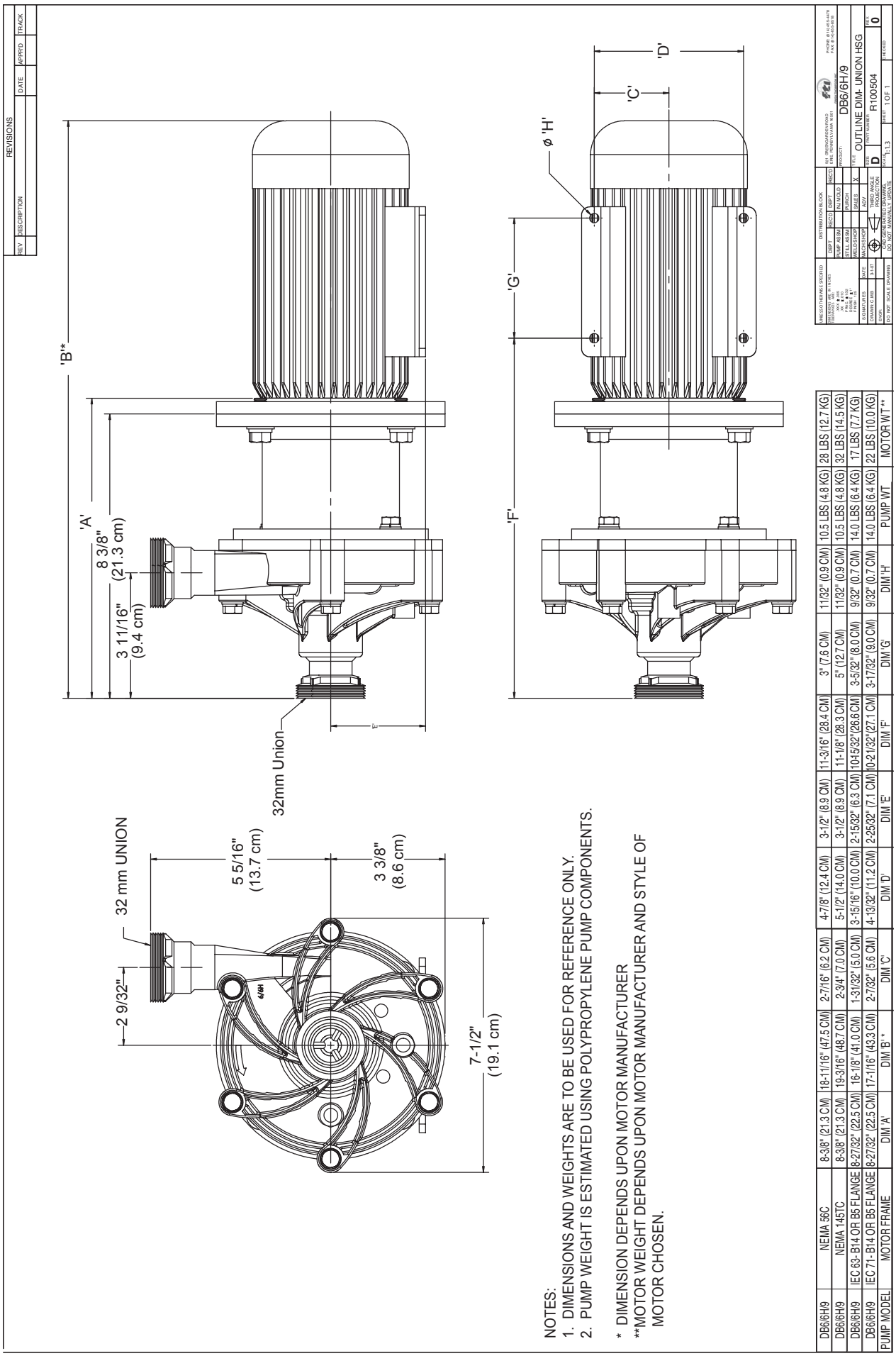

DB6/6H/9 Outline Dimensions - Flanged Housing (R100505)

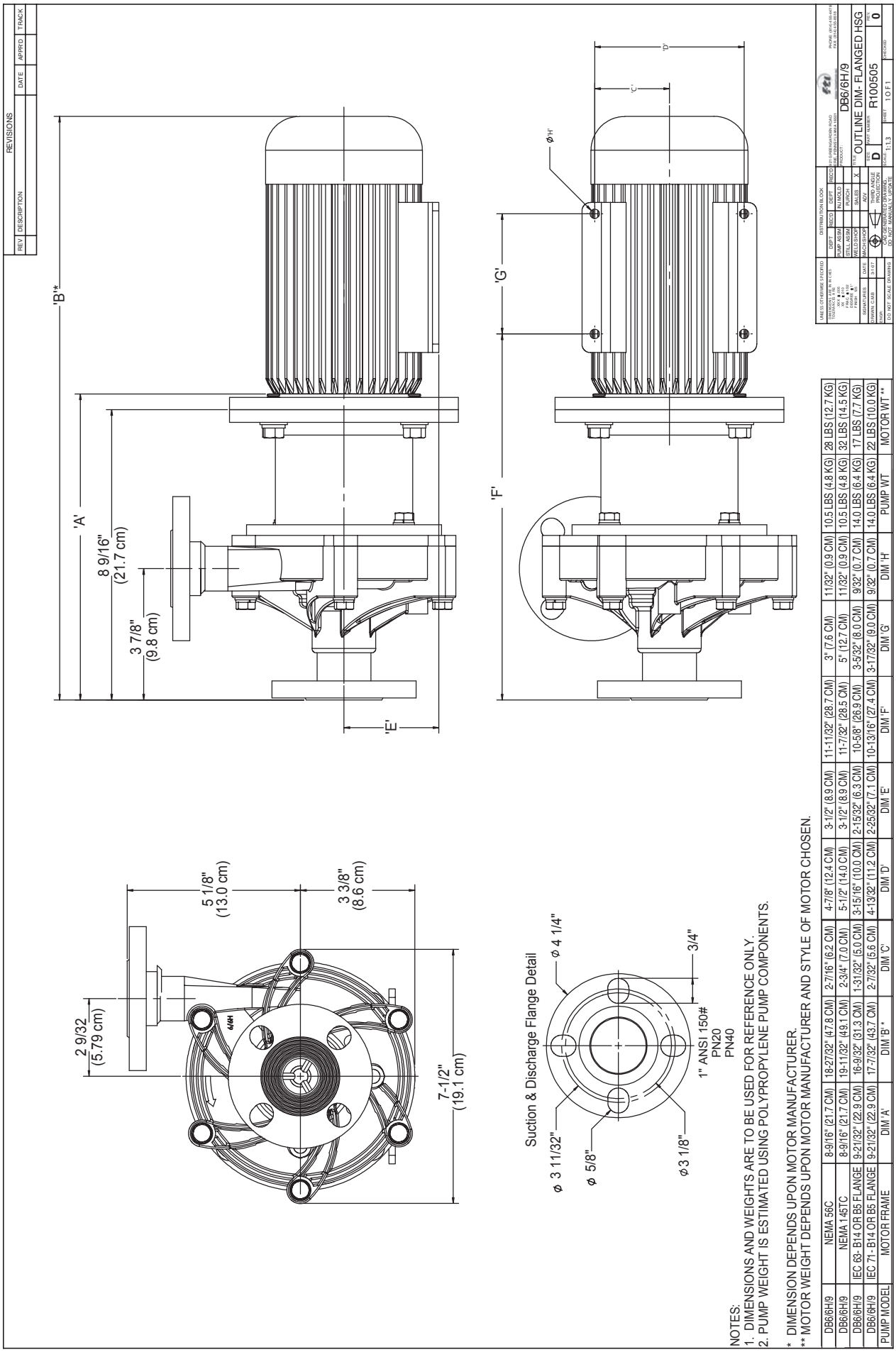

PUMP MODEL	MOTOR FRAME	DIM 'A'	DIM 'B'*	DIM 'C'	DIM 'D'	DIM 'E'	DIM 'F'	DIM 'G'	DIM 'H'	PUMP WT	MOTOR WT**
DB6/6H/9	NEMA 56C	8-9/16" (21.7 CM)	18-27/32" (47.8 CM)	2-7/16" (6.2 CM)	4-7/8" (12.4 CM)	3-1/2" (8.9 CM)	11-11/32" (28.7 CM)	3" (7.6 CM)	11/32" (0.9 CM)	10.5 LBS (4.8 KG)	28 LBS (12.7 KG)
DB6/6H/9	NEMA 145TC	8-9/16" (21.7 CM)	19-11/32" (49.1 CM)	2-3/4" (7.0 CM)	5-1/2" (14.0 CM)	3-1/2" (8.9 CM)	11-7/32" (28.5 CM)	5" (12.7 CM)	11/32" (0.9 CM)	10.5 LBS (4.8 KG)	32 LBS (14.5 KG)
DB6/6H/9	IEC 63- B14 OR B5 FLANGE	9-21/32" (22.9 CM)	16-9/32" (31.3 CM)	1-31/32" (5.0 CM)	3-15/16" (10.0 CM)	2-15/32" (6.3 CM)	10-5/8" (26.9 CM)	3-5/32" (8.0 CM)	9/32" (0.7 CM)	14.0 LBS (6.4 KG)	17 LBS (7.7 KG)
DB6/6H/9	IEC 71- B14 OR B5 FLANGE	9-21/32" (22.9 CM)	17-7/32" (43.7 CM)	2-7/32" (5.6 CM)	4-13/32" (11.2 CM)	2-25/32" (7.1 CM)	10-13/16" (27.4 CM)	3-17/32" (9.0 CM)	9/32" (0.7 CM)	14.0 LBS (6.4 KG)	22 LBS (10.0 KG)

DB8 Outline Dimensions - Threaded Housing (R100506)

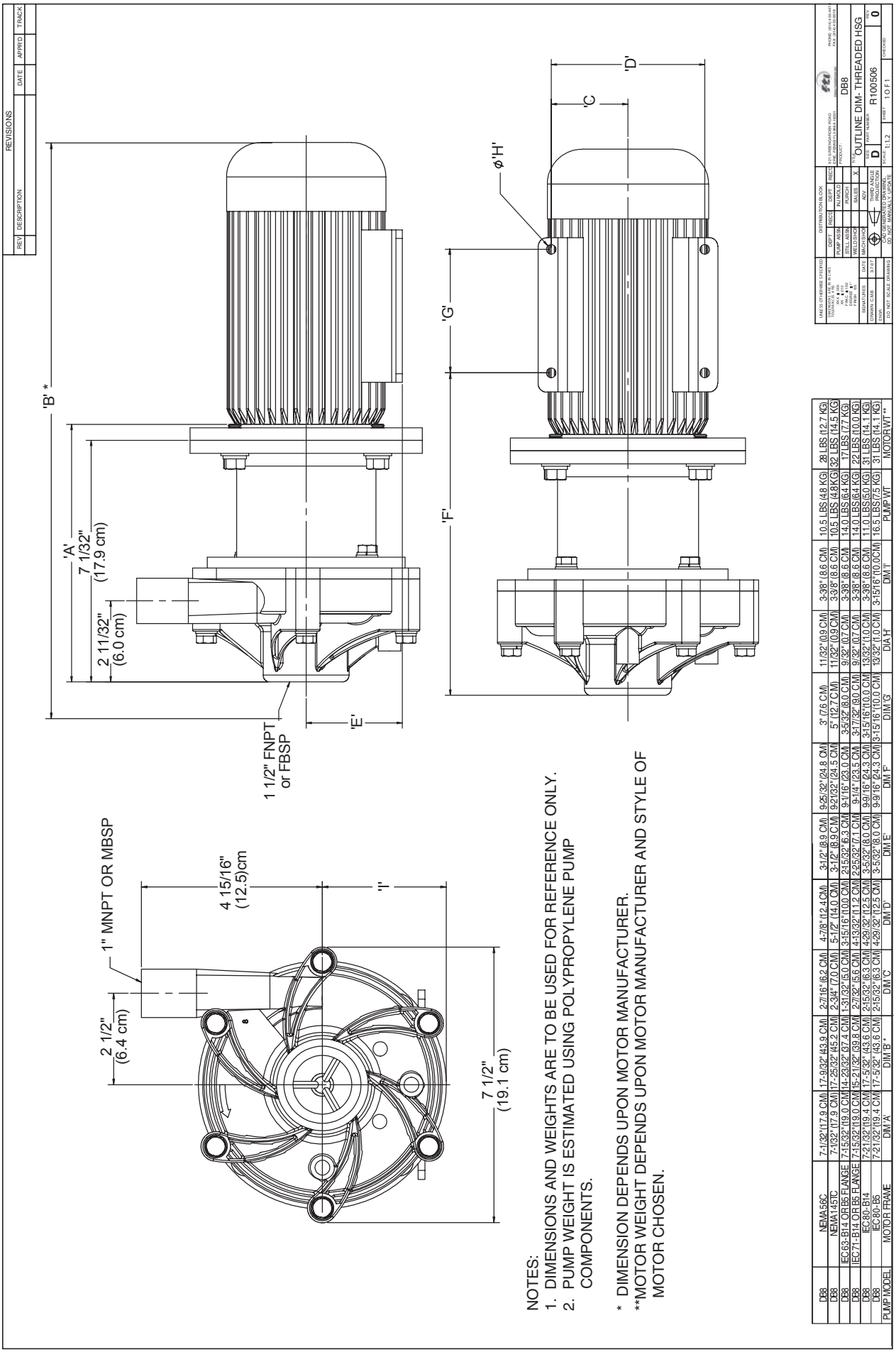

PUMP MODEL	MOTOR FRAME	DIM 'A'	DIM 'B' *	DIM 'C'	DIM 'D'	DIM 'E'	DIM 'F'	DIM 'G'	DIA 'H'	DIM 'I'	PUMP WT	MOTOR WT**
DB8	NEMA-56C	7-1/32" (17.9 CM)	17-9/32" (43.9 CM)	2-7/16" (6.2 CM)	4-7/8" (12.4 CM)	3-1/2" (8.9 CM)	9-25/32" (24.8 CM)	3" (7.6 CM)	11/32" (0.9 CM)	3-3/8" (8.6 CM)	10.5 LBS (4.8 KG)	28 LBS (12.7 KG)
DB8	NEMA145TC	7-1/32" (17.9 CM)	17-25/32" (45.2 CM)	2-3/4" (7.0 CM)	5-1/2" (14.0 CM)	3-1/2" (8.9 CM)	9-21/32" (24.5 CM)	5" (12.7 CM)	11/32" (0.9 CM)	3-3/8" (8.6 CM)	10.5 LBS (4.8 KG)	32 LBS (14.5 KG)
DB8	IEC63-B14 OR B5 FLANGE	7-15/32" (19.0 CM)	17-29/32" (67.4 CM)	1-31/32" (5.0 CM)	3-15/16" (10.0 CM)	2-15/32" (6.3 CM)	9-1/16" (23.0 CM)	3-5/32" (8.0 CM)	9/32" (0.7 CM)	3-3/8" (8.6 CM)	14.0 LBS (6.4 KG)	17 LBS (7.7 KG)
DB8	IIEC71-B14 OR B5 FLANGE	7-15/32" (19.0 CM)	16-21/32" (39.8 CM)	2-7/32" (5.6 CM)	4-13/32" (11.2 CM)	2-25/32" (7.1 CM)	9-1/4" (23.5 CM)	3-17/32" (9.0 CM)	9/32" (0.7 CM)	3-3/8" (8.6 CM)	14.0 LBS (6.4 KG)	22 LBS (10.0 KG)
DB8	IEC80-B14	7-21/32" (19.4 CM)	17-5/32" (43.6 CM)	2-15/32" (6.3 CM)	4-29/32" (12.5 CM)	3-5/32" (8.0 CM)	9-9/16" (24.3 CM)	3-15/16" (10.0 CM)	13/32" (1.0 CM)	3-3/8" (8.6 CM)	11.0 LBS (5.0 KG)	31 LBS (14.1 KG)
DB8	IEC80-B5	7-21/32" (19.4 CM)	17-5/32" (43.6 CM)	2-15/32" (6.3 CM)	4-29/32" (12.5 CM)	3-5/32" (8.0 CM)	9-9/16" (24.3 CM)	3-15/16" (10.0 CM)	13/32" (1.0 CM)	3-15/16" (10.0 CM)	16.5 LBS (7.5 KG)	31 LBS (14.1 KG)

DB8 Outline Dimensions - Union Housing (R100507)

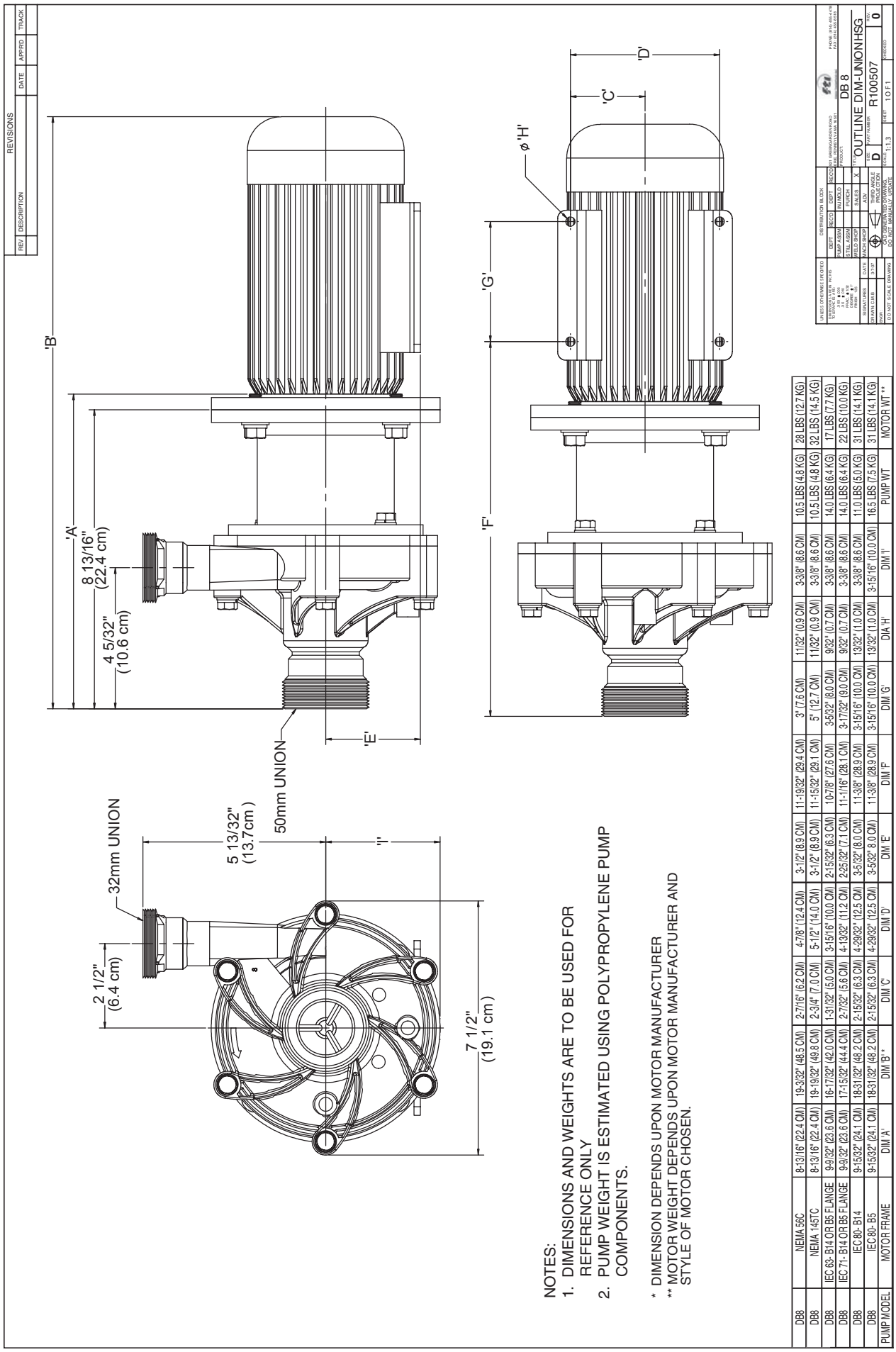

PUMP MODEL	MOTOR FRAME	DIM 'A'	DIM 'B' *	DIM 'C'	DIM 'D'	DIM 'E'	DIM 'F'	DIM 'G'	DIA 'H'	DIM 'I'	PUMP WT	MOTOR WT **
DB8	NEMA 56C	8-13/16" (22.4 CM)	19-3/32" (48.5 CM)	2-7/16" (6.2 CM)	4-7/8" (12.4 CM)	3-1/2" (8.9 CM)	11-19/32" (29.4 CM)	3" (7.6 CM)	11/32" (0.9 CM)	3-3/8" (8.6 CM)	10.5 LBS (4.8 KG)	28 LBS (12.7 KG)
DB8	NEMA 145TC	8-13/16" (22.4 CM)	19-19/32" (49.8 CM)	2-3/4" (7.0 CM)	5-1/2" (14.0 CM)	3-1/2" (8.9 CM)	11-15/32" (29.1 CM)	5" (12.7 CM)	11/32" (0.9 CM)	3-3/8" (8.6 CM)	10.5 LBS (4.8 KG)	32 LBS (14.5 KG)
DB8	IEC 63- B14 OR B5 FLANGE	9-9/32" (23.6 CM)	16-17/32" (42.0 CM)	1-31/32" (5.0 CM)	3-15/16" (10.0 CM)	2-15/32" (6.3 CM)	10-7/8" (27.6 CM)	3-5/32" (8.0 CM)	9/32" (0.7 CM)	3-3/8" (8.6 CM)	14.0 LBS (6.4 KG)	17 LBS (7.7 KG)
DB8	IEC 71- B14 OR B5 FLANGE	9-9/32" (23.6 CM)	17-15/32" (44.4 CM)	2-7/32" (5.6 CM)	4-13/32" (11.2 CM)	2-25/32" (7.1 CM)	11-11/16" (28.1 CM)	3-17/32" (9.0 CM)	9/32" (0.7 CM)	3-3/8" (8.6 CM)	14.0 LBS (6.4 KG)	22 LBS (10.0 KG)
DB8	IEC 80- B14	9-15/32" (24.1 CM)	18-31/32" (48.2 CM)	2-15/32" (6.3 CM)	4-29/32" (12.5 CM)	3-5/32" (8.0 CM)	11-3/8" (28.9 CM)	3-15/16" (10.0 CM)	13/32" (1.0 CM)	3-3/8" (8.6 CM)	11.0 LBS (5.0 KG)	31 LBS (14.1 KG)
DB8	IEC 80- B5	9-15/32" (24.1 CM)	18-31/32" (48.2 CM)	2-15/32" (6.3 CM)	4-29/32" (12.5 CM)	3-5/32" 8.0 CM)	11-3/8" (28.9 CM)	3-15/16" (10.0 CM)	13/32" (1.0 CM)	3-15/16" (10.0 CM)	16.5 LBS (7.5 KG)	31 LBS (14.1 KG)

DB8 Outline Dimensions - Flange Housing (R100508)

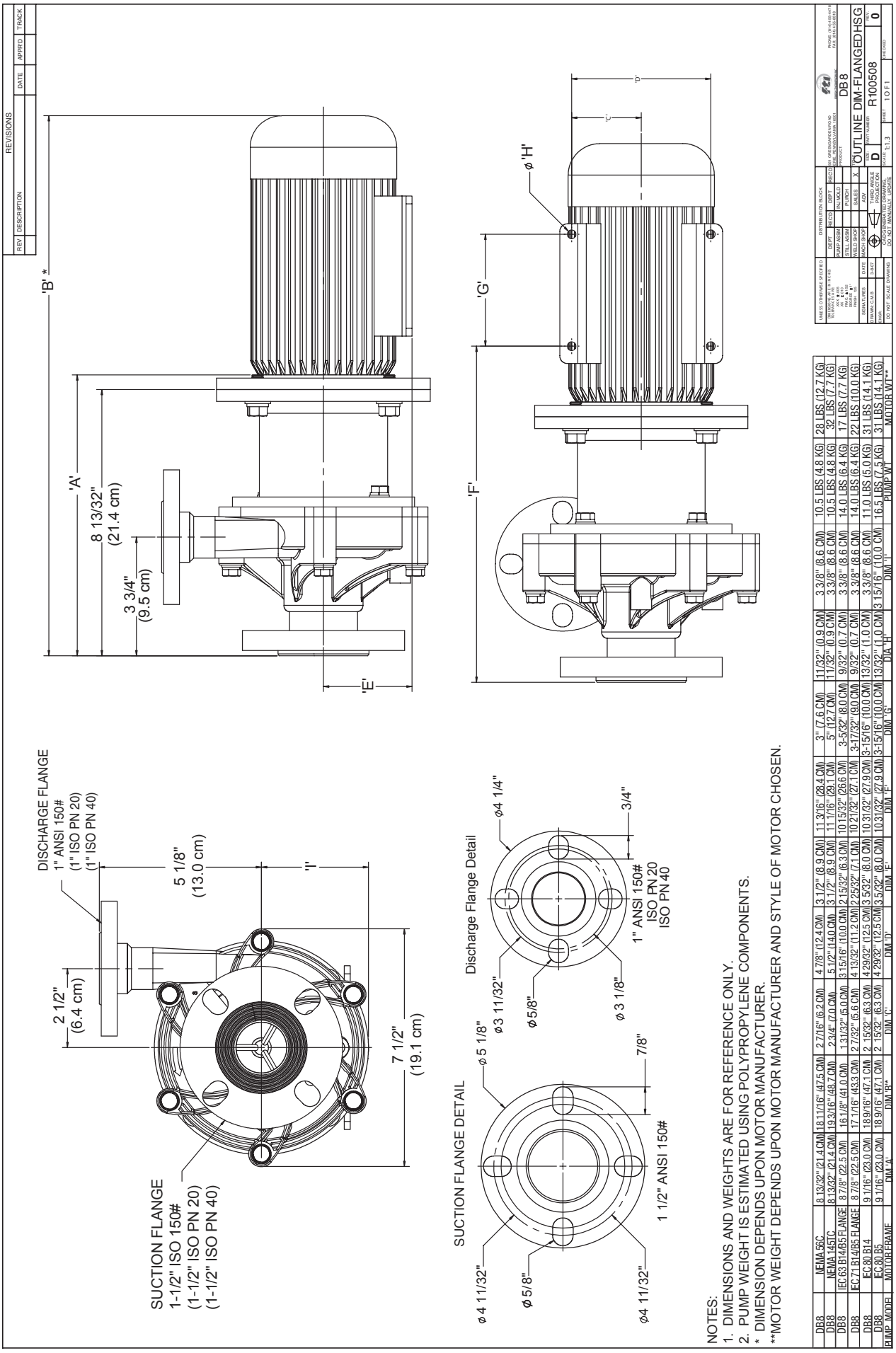

DB7/10 Outline Dimensions - Threaded Housing (R100509)

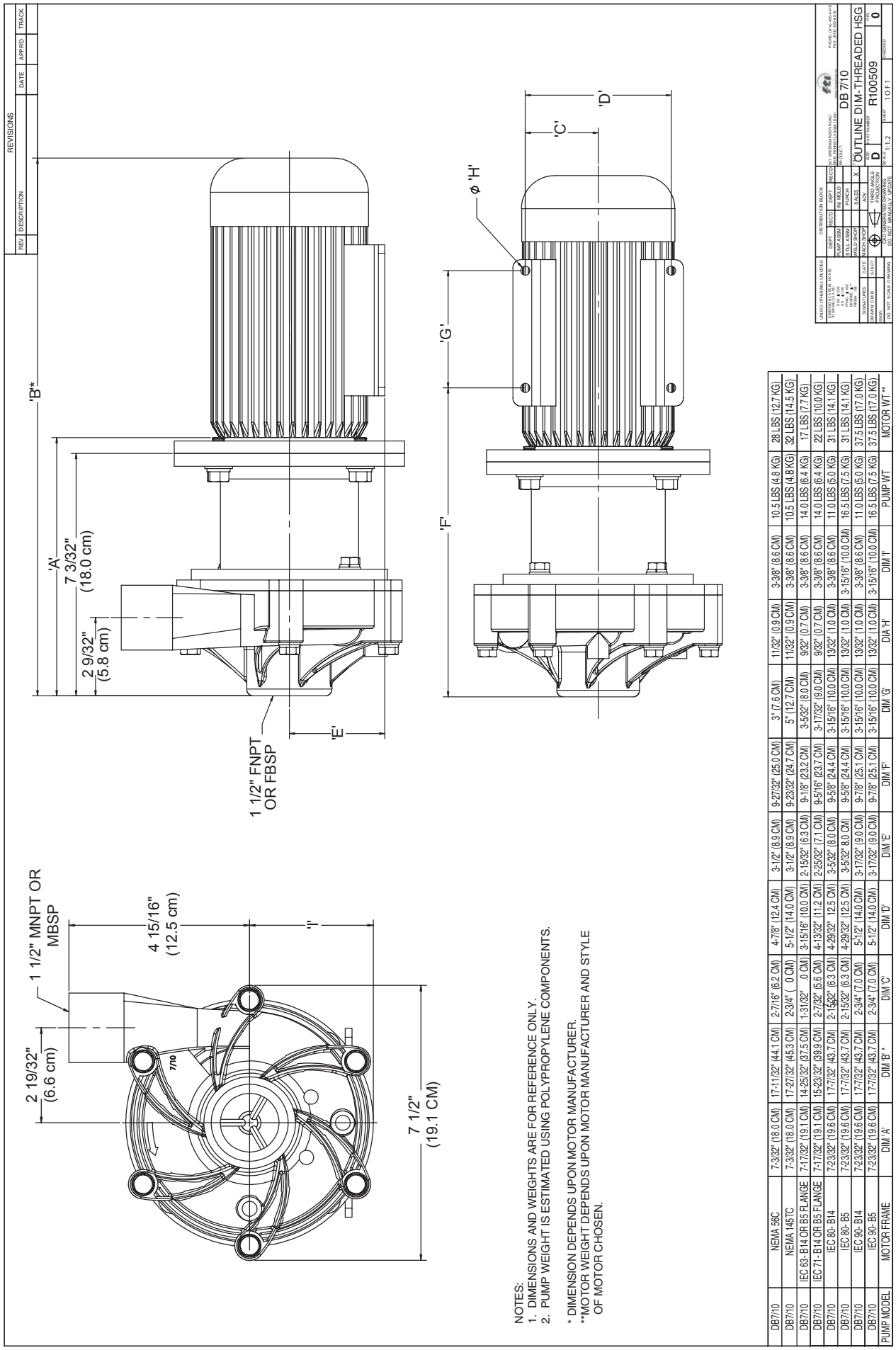

NOTES:
1. DIMENSIONS AND WEIGHTS ARE FOR REFERENCE ONLY.
2. PUMP WEIGHT IS ESTIMATED USING POLYPROPYLENE COMPONENTS.

* DIMENSION DEPENDS UPON MOTOR MANUFACTURER.
**MOTOR WEIGHT DEPENDS UPON MOTOR MANUFACTURER AND STYLE OF MOTOR CHOSEN.

DB7/10	NEMA 56C	7-3/32" (18.0 CM)	17-11/32" (44.1 CM)	2-7/16" (6.2 CM)	4-7/8" (12.4 CM)	3-1/2" (8.9 CM)	9-27/32" (25.0 CM)	3" (7.6 CM)	11/32" (0.9 CM)	3-3/8" (8.6 CM)	10.5 LBS (4.8 KG)	28 LBS (12.7 KG)
DB7/10	NEMA 145TC	7-3/32" (18.0 CM)	17-27/32" (45.3 CM)	2-3/4" (0 CM)	5-1/2" (14.0 CM)	3-1/2" (8.9 CM)	9-23/32" (24.7 CM)	5" (12.7 CM)	11/32" (0.9 CM)	3-3/8" (8.6 CM)	10.5 LBS (4.8 KG)	32 LBS (14.5 KG)
DB7/10	IEC 63- B14 OR B5 FLANGE	7-17/32" (19.1 CM)	14-25/32" (37.5 CM)	1-31/32" (0 CM)	3-15/16" (10.0 CM)	2-15/32" (6.3 CM)	9-1/8" (23.2 CM)	3-5/32" (8.0 CM)	9/32" (0.7 CM)	3-3/8" (8.6 CM)	14.0 LBS (6.4 KG)	17 LBS (7.7 KG)
DB7/10	IEC 71- B14 OR B5 FLANGE	7-17/32" (19.1 CM)	15-23/32" (39.9 CM)	2-7/32" (5.6 CM)	4-13/32" (11.2 CM)	2-25/32" (7.1 CM)	9-5/16" (23.7 CM)	3-17/32" (9.0 CM)	9/32" (0.7 CM)	3-3/8" (8.6 CM)	14.0 LBS (6.4 KG)	22 LBS (10.0 KG)
DB7/10	IEC 80- B14	7-23/32" (19.6 CM)	17-7/32" (43.7 CM)	2-15/32" (6.3 CM)	4-29/32" (12.5 CM)	3-5/32" (8.0 CM)	9-5/8" (24.4 CM)	3-15/16" (10.0 CM)	13/32" (1.0 CM)	3-3/8" (8.6 CM)	11.0 LBS (5.0 KG)	31 LBS (14.1 KG)
DB7/10	IEC 80- B5	7-23/32" (19.6 CM)	17-7/32" (43.7 CM)	2-15/32" (6.3 CM)	4-29/32" (12.5 CM)	3-5/32" (8.0 CM)	9-5/8" (24.4 CM)	3-15/16" (10.0 CM)	13/32" (1.0 CM)	3-15/16" (10.0 CM)	16.5 LBS (7.5 KG)	31 LBS (14.1 KG)
DB7/10	IEC 90- B14	7-23/32" (19.6 CM)	17-7/32" (43.7 CM)	2-3/4" (7.0 CM)	5-1/2" (14.0 CM)	3-17/32" (9.0 CM)	9-7/8" (25.1 CM)	3-15/16" (10.0 CM)	13/32" (1.0 CM)	3-3/8" (8.6 CM)	11.0 LBS (5.0 KG)	37.5 LBS (17.0 KG)
DB7/10	IEC 90- B5	7-23/32" (19.6 CM)	17-7/32" (43.7 CM)	2-3/4" (7.0 CM)	5-1/2" (14.0 CM)	3-17/32" (9.0 CM)	9-7/8" (25.1 CM)	3-15/16" (10.0 CM)	13/32" (1.0 CM)	3-15/16" (10.0 CM)	16.5 LBS (7.5 KG)	37.5 LBS (17.0 KG)
PUMP MODEL	MOTOR FRAME	DIM 'A'	DIM 'B' *	DIM 'C'	DIM 'D'	DIM 'E'	DIM 'F'	DIM 'G'	DIA 'H'	DIM 'I'	PUMP WT	MOTOR WT **

DB7/10 Outline Dimensions - Union Housing (R100510)

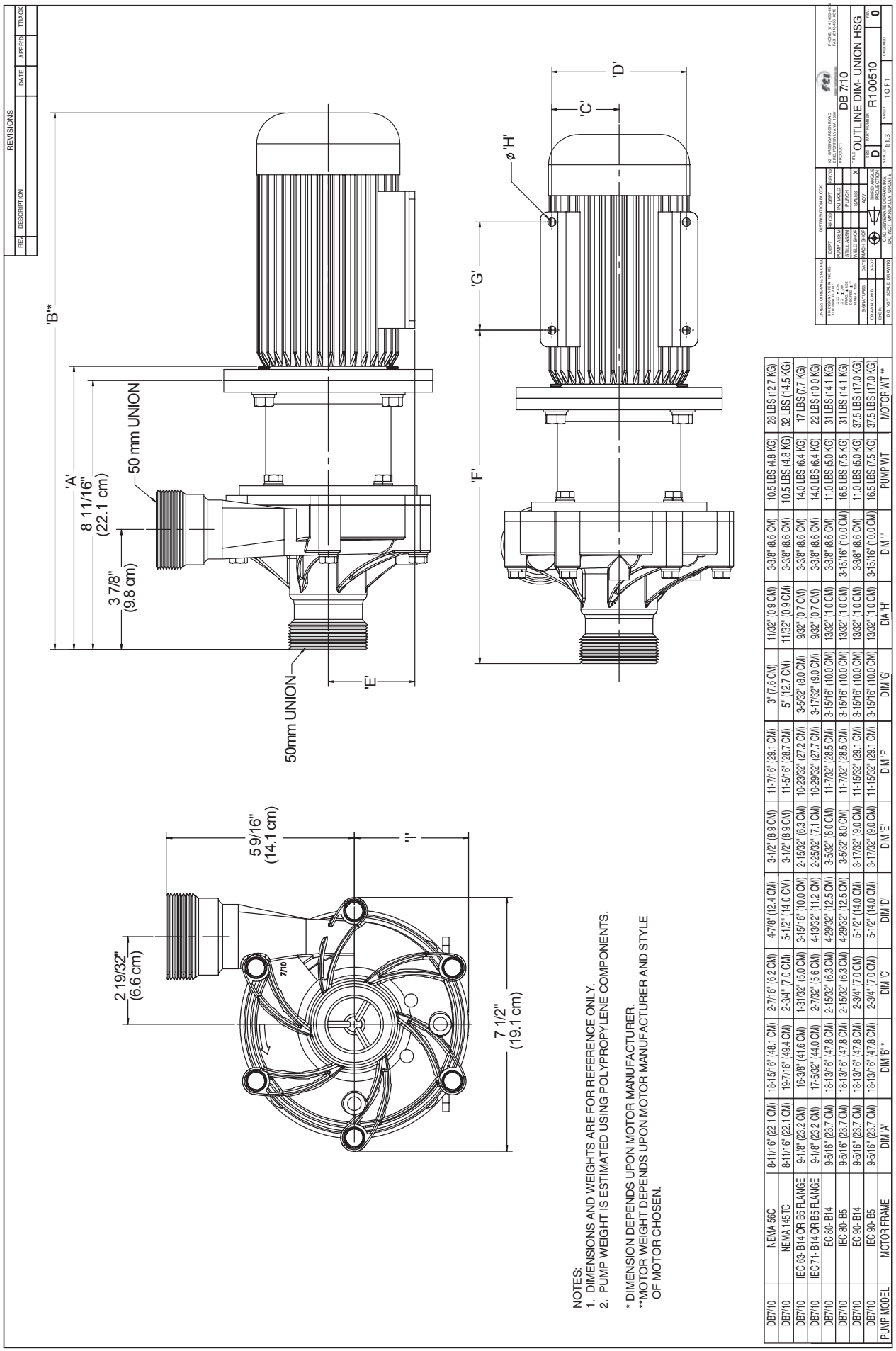

DB7/10 Outline Dimensions - Flange Housing (R100512)

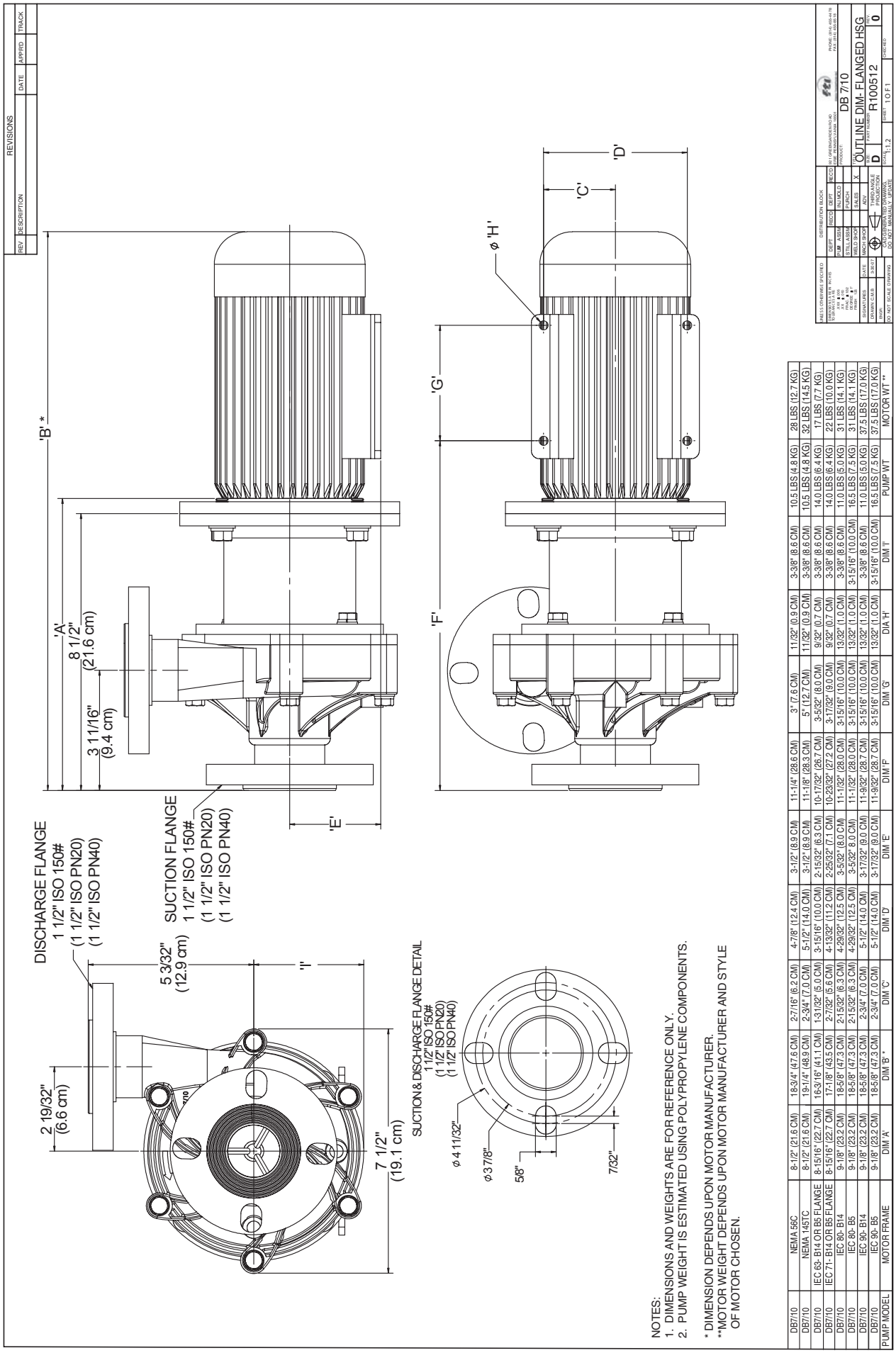

PUMP MODEL	MOTOR FRAME	DIM 'A'	DIM 'B' **	DIM 'C'	DIM 'D'	DIM 'E'	DIM 'F'	DIM 'G'	DIA 'H'	DIM 'I'	PUMP WT	MOTOR WT **
DB7/10	NEMA 56C	8-1/2" (21.6 CM)	18-3/4" (47.6 CM)	2-7/16" (6.2 CM)	4-7/8" (12.4 CM)	3-1/2" (8.9 CM)	11-1/4" (28.6 CM)	3" (7.6 CM)	11/32" (0.9 CM)	3-3/8" (8.6 CM)	10.5 LBS (4.8 KG)	28 LBS (12.7 KG)
DB7/10	NEMA 145TC	8-1/2" (21.6 CM)	19-1/4" (48.9 CM)	2-3/4" (7.0 CM)	5-1/2" (14.0 CM)	3-1/2" (8.9 CM)	11-1/8" (28.3 CM)	5" (12.7 CM)	11/32" (0.9 CM)	3-3/8" (8.6 CM)	10.5 LBS (4.8 KG)	32 LBS (14.5 KG)
DB7/10	IEC 63- B14 OR B5 FLANGE	8-15/16" (22.7 CM)	16-3/16" (41.1 CM)	1-3 1/32" (5.0 CM)	3-15/16" (10.0 CM)	2-15/32" (6.3 CM)	10-17/32" (26.7 CM)	3-5/32" (8.0 CM)	9/32" (0.7 CM)	3-3/8" (8.6 CM)	14.0 LBS (6.4 KG)	17 LBS (7.7 KG)
DB7/10	IEC 71- B14 OR B5 FLANGE	8-15/16" (22.7 CM)	17-1/8" (43.5 CM)	2-7/32" (5.6 CM)	4-13/32" (11.2 CM)	2-25/32" (7.1 CM)	10-23/32" (27.2 CM)	3-17/32" (9.0 CM)	9/32" (0.7 CM)	3-3/8" (8.6 CM)	14.0 LBS (6.4 KG)	22 LBS (10.0 KG)
DB7/10	IEC 80- B14	9-1/8" (23.2 CM)	18-5/8" (47.3 CM)	2-15/32" (6.3 CM)	4-29/32" (12.5 CM)	3-5/32" (8.0 CM)	11-1/32" (28.0 CM)	3-15/16" (10.0 CM)	13/32" (1.0 CM)	3-3/8" (8.6 CM)	11.0 LBS (5.0 KG)	31 LBS (14.1 KG)
DB7/10	IEC 80- B5	9-1/8" (23.2 CM)	18-5/8" (47.3 CM)	2-15/32" (6.3 CM)	4-29/32" (12.5 CM)	3-5/32" 8.0 CM)	11-1/32" (28.0 CM)	3-15/16" (10.0 CM)	13/32" (1.0 CM)	3-15/16" (10.0 CM)	16.5 LBS (7.5 KG)	31 LBS (14.1 KG)
DB7/10	IEC 90- B14	9-1/8" (23.2 CM)	18-5/8" (47.3 CM)	2-3/4" (7.0 CM)	5-1/2" (14.0 CM)	3-17/32" (9.0 CM)	11-9/32" (28.7 CM)	3-15/16" (10.0 CM)	13/32" (1.0 CM)	3-3/8" (8.6 CM)	11.0 LBS (5.0 KG)	37.5 LBS (17.0 KG)
DB7/10	IEC 90- B5	9-1/8" (23.2 CM)	18-5/8" (47.3 CM)	2-3/4" (7.0 CM)	5-1/2" (14.0 CM)	3-17/32" (9.0 CM)	11-9/32" (28.7 CM)	3-15/16" (10.0 CM)	13/32" (1.0 CM)	3-15/16" (10.0 CM)	16.5 LBS (7.5 KG)	37.5 LBS (17.0 KG)

DB11/15 OUTLINE DIMENSIONS - THREADED HOUSING (R100422)

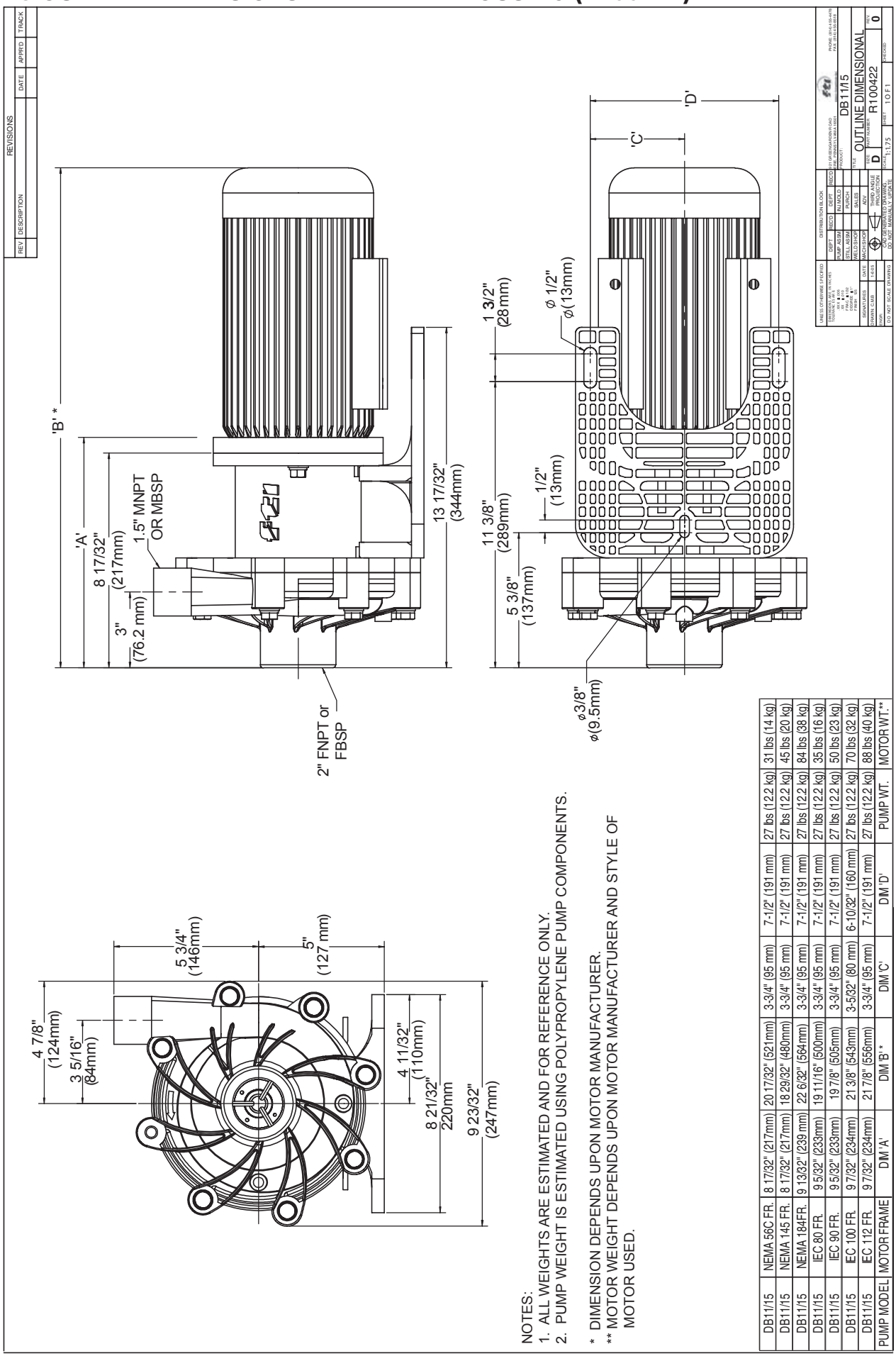

NOTES:
1. ALL WEIGHTS ARE ESTIMATED AND FOR REFERENCE ONLY.
2. PUMP WEIGHT IS ESTIMATED USING POLYPROPYLENE PUMP COMPONENTS.

* DIMENSION DEPENDS UPON MOTOR MANUFACTURER.
** MOTOR WEIGHT DEPENDS UPON MOTOR MANUFACTURER AND STYLE OF MOTOR USED.

PUMP MODEL	MOTOR FRAME	DIM 'A'	DIM 'B' *	DIM 'C'	DIM 'D'	PUMP WT.	MOTOR WT.**
DB11/15	NEMA 56C FR.	8 17/32" (217mm)	20 17/32" (521mm)	3-3/4" (95 mm)	7-1/2" (191 mm)	27 lbs (12.2 kg)	31 lbs (14 kg)
DB11/15	NEMA 145 FR.	8 17/32" (217mm)	18 29/32" (480mm)	3-3/4" (95 mm)	7-1/2" (191 mm)	27 lbs (12.2 kg)	45 lbs (20 kg)
DB11/15	NEMA 184FR.	9 13/32" (239 mm)	22 6/32" (564mm)	3-3/4" (95 mm)	7-1/2" (191 mm)	27 lbs (12.2 kg)	84 lbs (38 kg)
DB11/15	IEC 80 FR.	9 5/32" (233mm)	19 11/16" (500mm)	3-3/4" (95 mm)	7-1/2" (191 mm)	27 lbs (12.2 kg)	35 lbs (16 kg)
DB11/15	IEC 90 FR.	9 5/32" (233mm)	19 7/8" (505mm)	3-3/4" (95 mm)	7-1/2" (191 mm)	27 lbs (12.2 kg)	50 lbs (23 kg)
DB11/15	IEC 100 FR.	9 7/32" (234mm)	21 3/8" (543mm)	3-5/32" (80 mm)	6-10/32" (160 mm)	27 lbs (12.2 kg)	70 lbs (32 kg)
DB11/15	IEC 112 FR.	9 7/32" (234mm)	21 7/8" (556mm)	3-3/4" (95 mm)	7-1/2" (191 mm)	27 lbs (12.2 kg)	88 lbs (40 kg)

DB11/15 OUTLINE DIMENSIONS - UNION HOUSING (R100424)

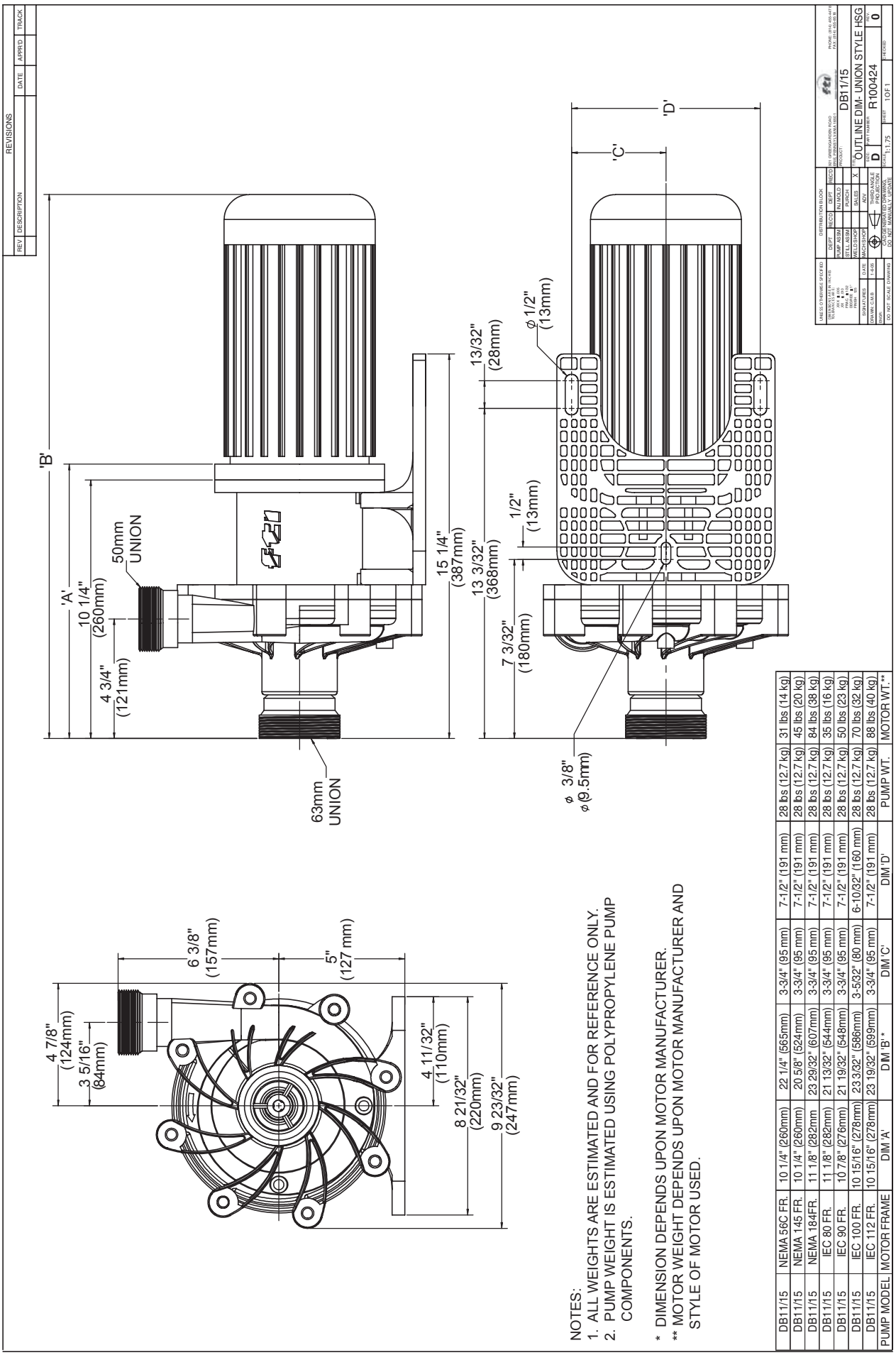

NOTES:
1. ALL WEIGHTS ARE ESTIMATED AND FOR REFERENCE ONLY.
2. PUMP WEIGHT IS ESTIMATED USING POLYPROPYLENE PUMP COMPONENTS.

* DIMENSION DEPENDS UPON MOTOR MANUFACTURER.
** MOTOR WEIGHT DEPENDS UPON MOTOR MANUFACTURER AND STYLE OF MOTOR USED.

PUMP MODEL	MOTOR FRAME	DIM 'A'	DIM 'B' *	DIM 'C'	DIM 'D'	PUMP WT.	MOTOR WT.**
DB11/15	NEMA 56C FR.	10 1/4" (260mm)	22 1/4" (565mm)	3-3/4" (95 mm)	7-1/2" (191 mm)	28 lbs (12.7 kg)	31 lbs (14 kg)
DB11/15	NEMA 145 FR.	10 1/4" (260mm)	20 5/8" (524mm)	3-3/4" (95 mm)	7-1/2" (191 mm)	28 lbs (12.7 kg)	45 lbs (20 kg)
DB11/15	NEMA 184FR.	11 1/8" (282mm	23 29/32" (607mm)	3-3/4" (95 mm)	7-1/2" (191 mm)	28 lbs (12.7 kg)	84 lbs (38 kg)
DB11/15	IEC 80 FR.	11 1/8" (282mm)	21 13/32" (544mm)	3-3/4" (95 mm)	7-1/2" (191 mm)	28 lbs (12.7 kg)	35 lbs (16 kg)
DB11/15	IEC 90 FR.	10 7/8" (276mm)	21 19/32" (548mm)	3-3/4" (95 mm)	7-1/2" (191 mm)	28 lbs (12.7 kg)	50 lbs (23 kg)
DB11/15	IEC 100 FR.	10 15/16" (278mm)	23 3/32" (586mm)	3-5/32" (80 mm)	6-10/32" (160 mm)	28 lbs (12.7 kg)	70 lbs (32 kg)
DB11/15	IEC 112 FR.	10 15/16" (278mm)	23 19/32" (599mm)	3-3/4" (95 mm)	7-1/2" (191 mm)	28 lbs (12.7 kg)	88 lbs (40 kg)

DB11/15 OUTLINE DIMENSIONS - FLANGED HOUSING (R100423)

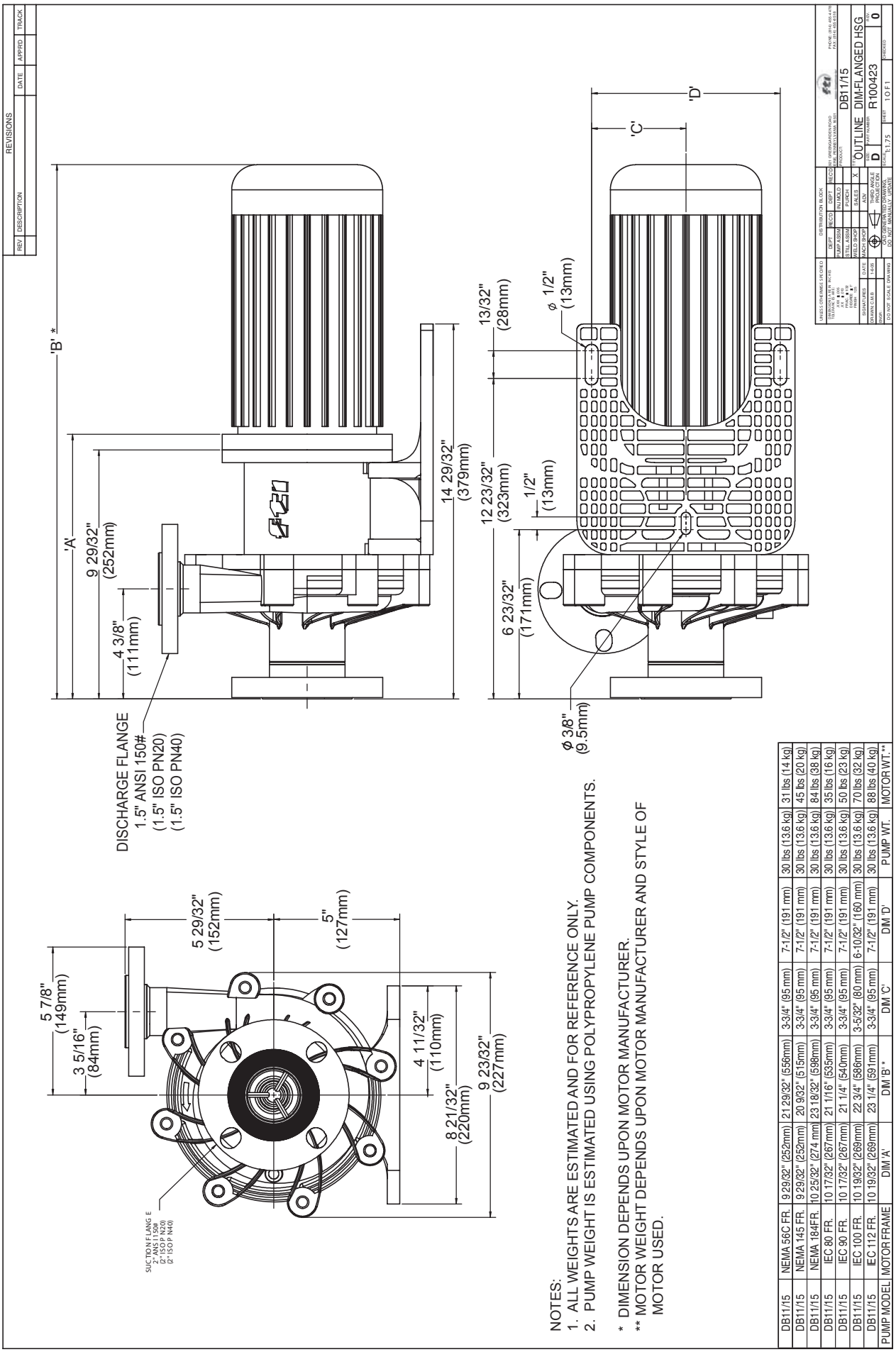

PUMP MODEL	MOTOR FRAME	DIM 'A'	DIM 'B' *	DIM 'C'	DIM 'D'	PUMP WT.	MOTOR WT.**
DB11/15	NEMA 56C FR.	9 29/32" (252mm)	21 29/32" (556mm)	3-3/4" (95 mm)	7-1/2" (191 mm)	30 lbs (13.6 kg)	31 lbs (14 kg)
DB11/15	NEMA 145 FR.	9 29/32" (252mm)	20 9/32" (515mm)	3-3/4" (95 mm)	7-1/2" (191 mm)	30 lbs (13.6 kg)	45 lbs (20 kg)
DB11/15	NEMA 184FR.	10 25/32" (274 mm)	23 18/32" (598mm)	3-3/4" (95 mm)	7-1/2" (191 mm)	30 lbs (13.6 kg)	84 lbs (38 kg)
DB11/15	IEC 80 FR.	10 17/32" (267mm)	21 1/16" (535mm)	3-3/4" (95 mm)	7-1/2" (191 mm)	30 lbs (13.6 kg)	35 lbs (16 kg)
DB11/15	IEC 90 FR.	10 17/32" (267mm)	21 1/4" (540mm)	3-3/4" (95 mm)	7-1/2" (191 mm)	30 lbs (13.6 kg)	50 lbs (23 kg)
DB11/15	IEC 100 FR.	10 19/32" (269mm)	22 3/4" (586mm)	3-5/32" (80 mm)	6-10/32" (160 mm)	30 lbs (13.6 kg)	70 lbs (32 kg)
DB11/15	IEC 112 FR.	10 19/32" (269mm)	23 1/4" (591mm)	3-3/4" (95 mm)	7-1/2" (191 mm)	30 lbs (13.6 kg)	88 lbs (40 kg)

DB11/15 OUTLINE DIMENSIONS - THREADED HSG - 80-90 FR B5 (R100451)

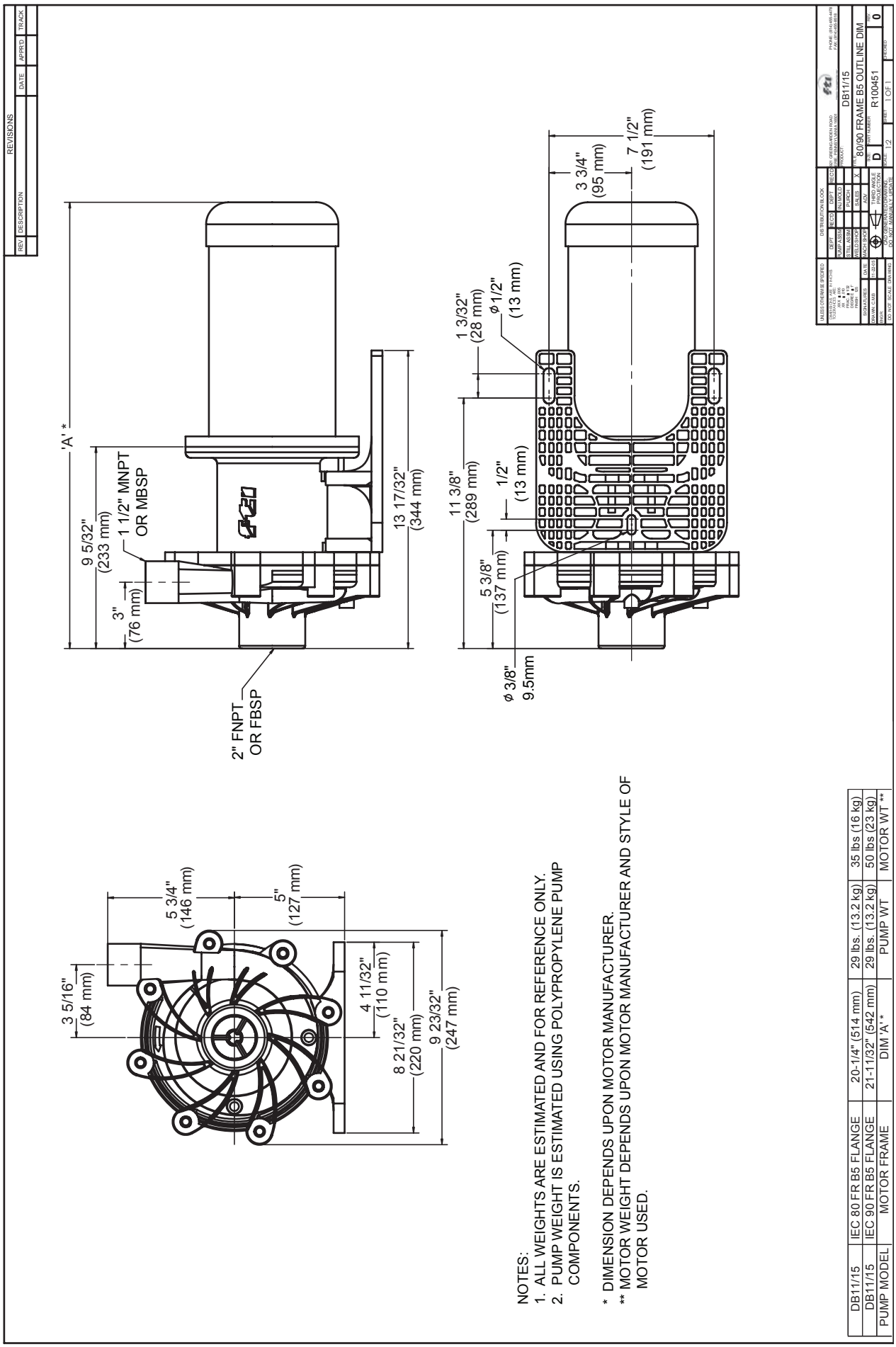

NOTES:
1. ALL WEIGHTS ARE ESTIMATED AND FOR REFERENCE ONLY.
2. PUMP WEIGHT IS ESTIMATED USING POLYPROPYLENE PUMP COMPONENTS.

* DIMENSION DEPENDS UPON MOTOR MANUFACTURER.
** MOTOR WEIGHT DEPENDS UPON MOTOR MANUFACTURER AND STYLE OF MOTOR USED.

PUMP MODEL	MOTOR FRAME	DIM 'A' *	PUMP WT	MOTOR WT **
DB11/15	IEC 80 FR B5 FLANGE	20-1/4" (514 mm)	29 lbs. (13.2 kg)	35 lbs (16 kg)
DB11/15	IEC 90 FR B5 FLANGE	21-11/32" (542 mm)	29 lbs. (13.2 kg)	50 lbs (23 kg)

DB11/15 OUTLINE DIMENSIONS - UNION HSG - 80-90 FR B5 (R100452)

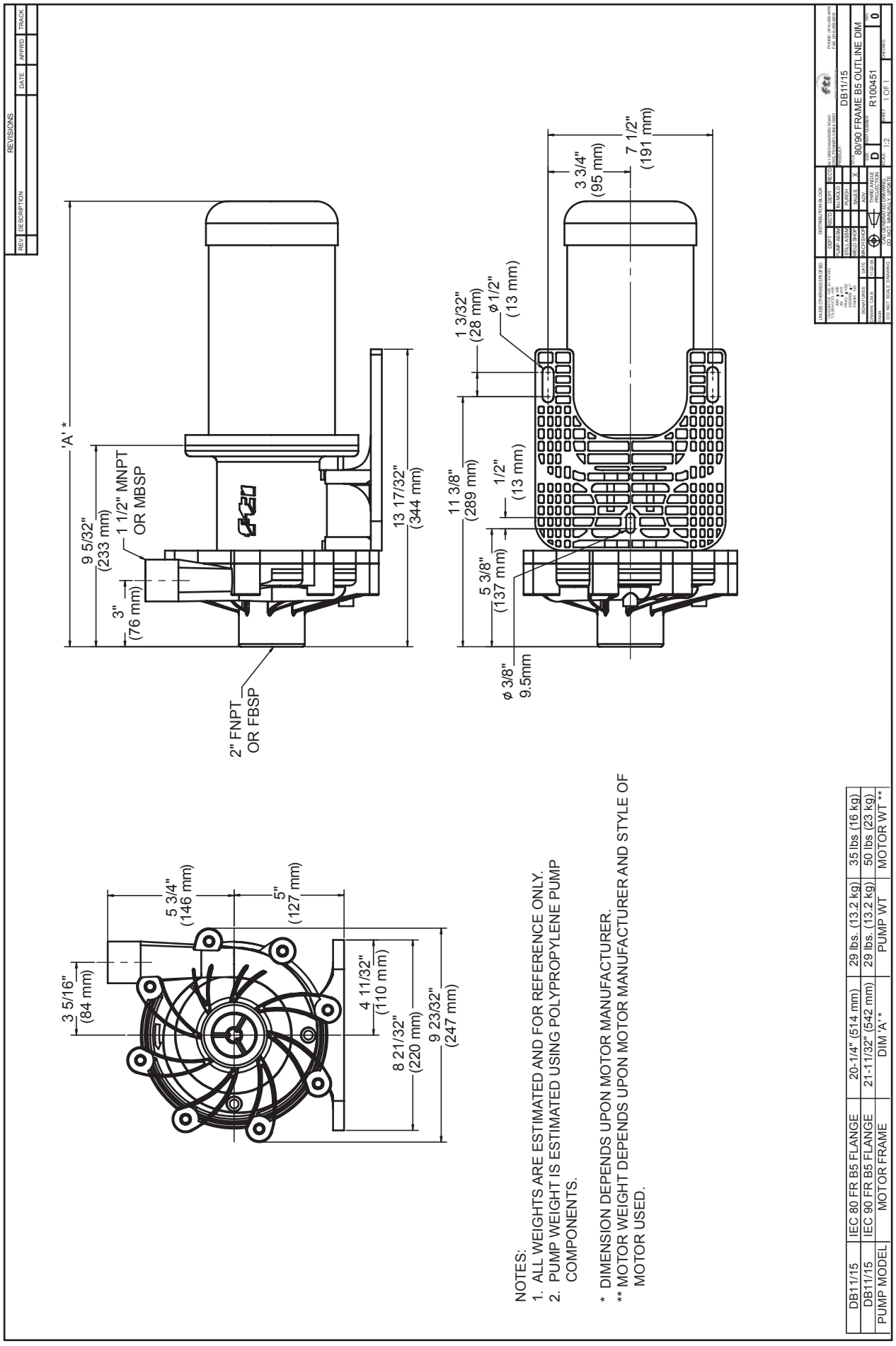

NOTES:
1. ALL WEIGHTS ARE ESTIMATED AND FOR REFERENCE ONLY.
2. PUMP WEIGHT IS ESTIMATED USING POLYPROPYLENE PUMP COMPONENTS.

* DIMENSION DEPENDS UPON MOTOR MANUFACTURER.
** MOTOR WEIGHT DEPENDS UPON MOTOR MANUFACTURER AND STYLE OF MOTOR USED.

DB11/15	IEC 80 FR B5 FLANGE	20-1/4" (514 mm)	29 lbs. (13.2 kg)	35 lbs (16 kg)
DB11/15	IEC 90 FR B5 FLANGE	21-11/32" (542 mm)	29 lbs. (13.2 kg)	50 lbs (23 kg)
PUMP MODEL	MOTOR FRAME	DIM 'A' *	PUMP WT	MOTOR WT **

DB11/15 OUTLINE DIMENSIONS - FLANGE HSG - 80-90 FR B5 (R100453)

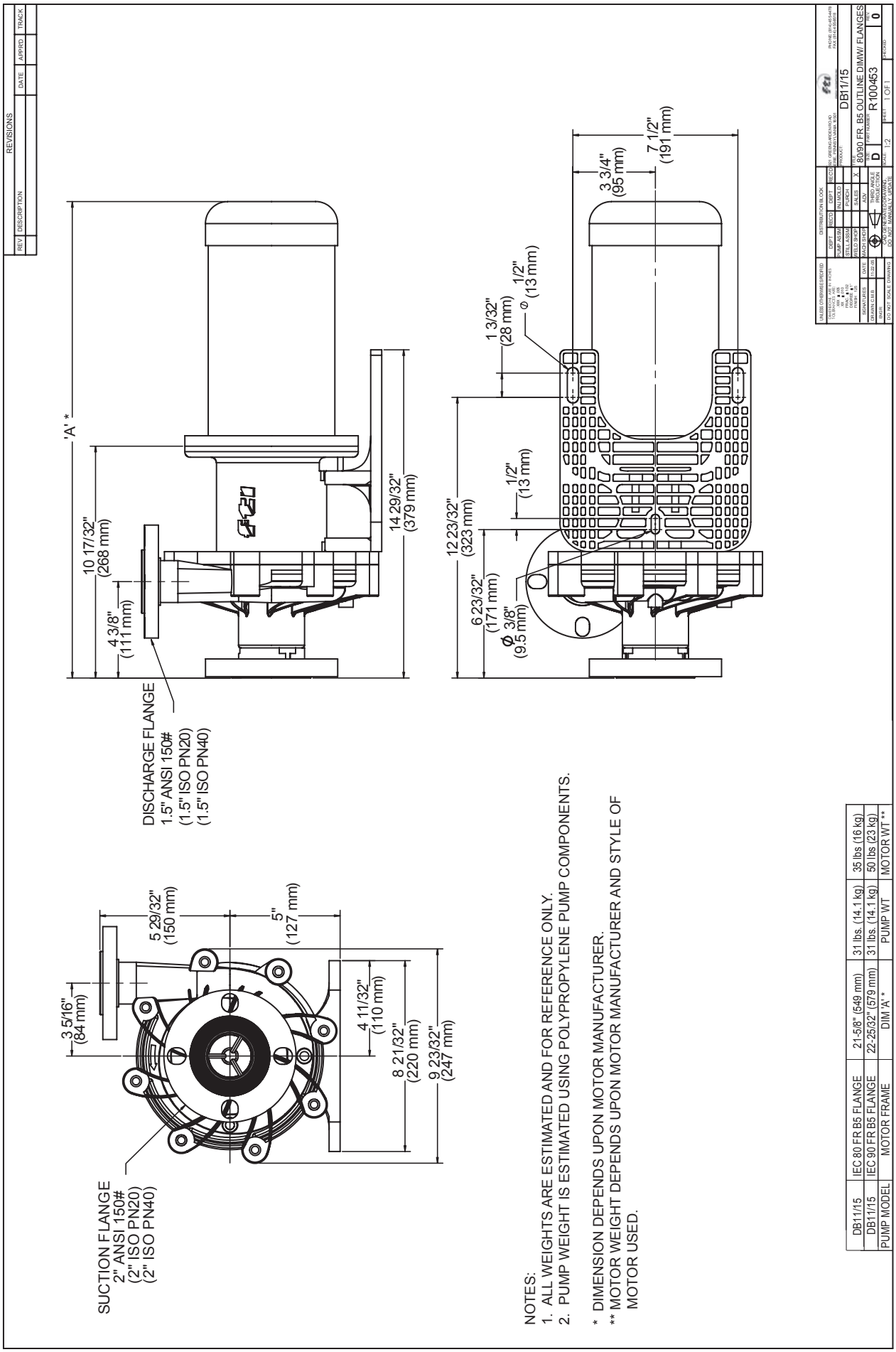

NOTES:
1. ALL WEIGHTS ARE ESTIMATED AND FOR REFERENCE ONLY.
2. PUMP WEIGHT IS ESTIMATED USING POLYPROPYLENE PUMP COMPONENTS.

* DIMENSION DEPENDS UPON MOTOR MANUFACTURER.
** MOTOR WEIGHT DEPENDS UPON MOTOR MANUFACTURER AND STYLE OF MOTOR USED.

DB11/15	IEC 80 FR B5 FLANGE	21-5/8" (549 mm)	31 lbs. (14.1 kg)	35 lbs (16 kg)
DB11/15	IEC 90 FR B5 FLANGE	22-25/32" (579 mm)	31 lbs. (14.1 kg)	50 lbs (23 kg)
PUMP MODEL	MOTOR FRAME	DIM 'A' *	PUMP WT	MOTOR WT **

DB11/15 OUTLINE DIMENSIONS - THREADED HSG - 100-112 FR B5 (R100454)

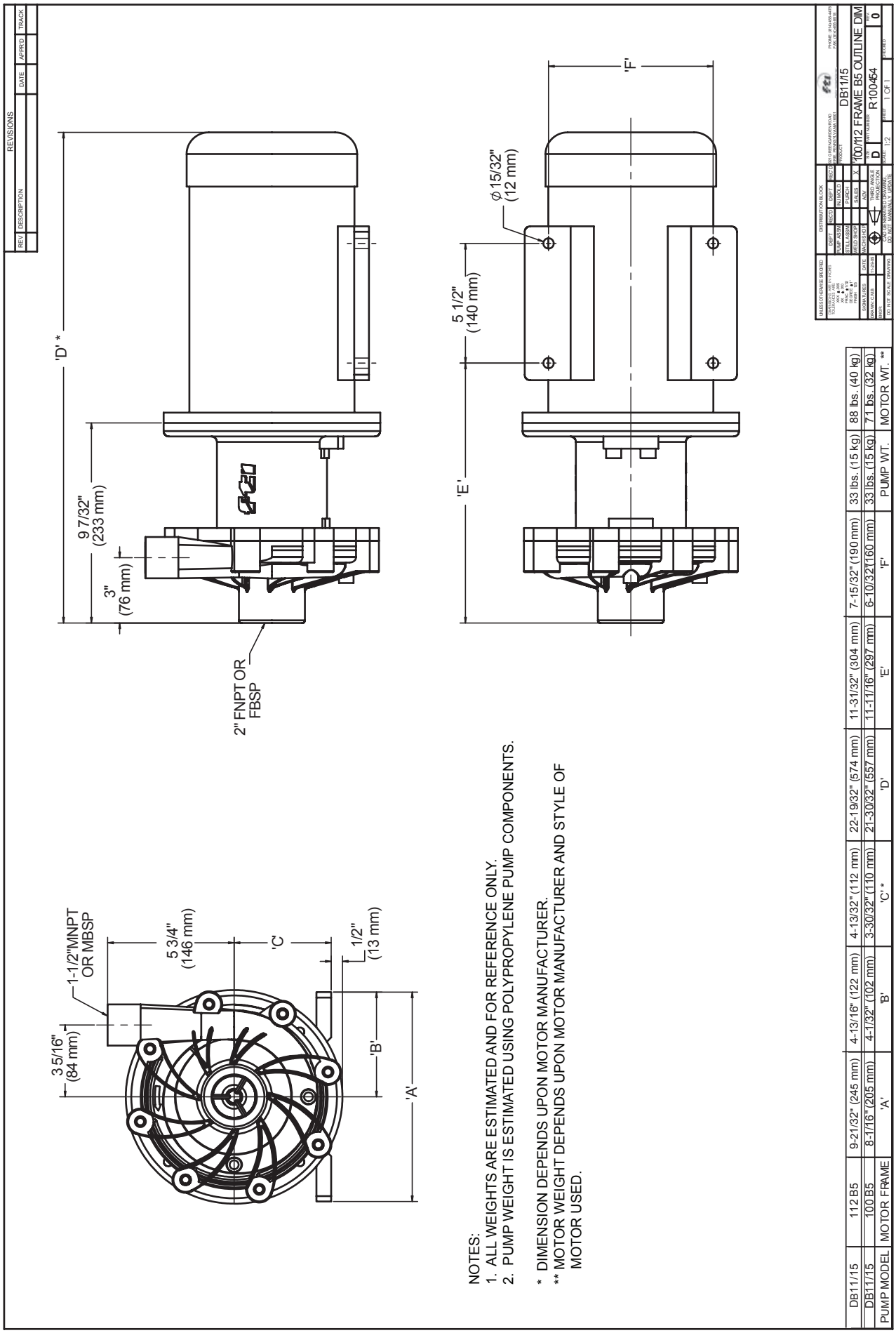

NOTES:
1. ALL WEIGHTS ARE ESTIMATED AND FOR REFERENCE ONLY.
2. PUMP WEIGHT IS ESTIMATED USING POLYPROPYLENE PUMP COMPONENTS.

* DIMENSION DEPENDS UPON MOTOR MANUFACTURER.
** MOTOR WEIGHT DEPENDS UPON MOTOR MANUFACTURER AND STYLE OF MOTOR USED.

PUMP MODEL	MOTOR FRAME	'A'	'B'	'C' *	'D'	'E'	'F'	PUMP WT.	MOTOR WT. **
DB11/15	112 B5	9-21/32" (245 mm)	4-13/16" (122 mm)	4-13/32" (112 mm)	22-19/32" (574 mm)	11-31/32" (304 mm)	7-15/32" (190 mm)	33 lbs. (15 kg)	88 lbs. (40 kg)
DB11/15	100 B5	8-1/16" (205 mm)	4-1/32" (102 mm)	3-30/32" (110 mm)	21-30/32" (557 mm)	11-11/16" (297 mm)	6-10/32" (160 mm)	33 lbs. (15 kg)	71 lbs. (32 kg)

DB11/15 OUTLINE DIMENSIONS - UNION HSG - 100-112 FR B5 (R100455)

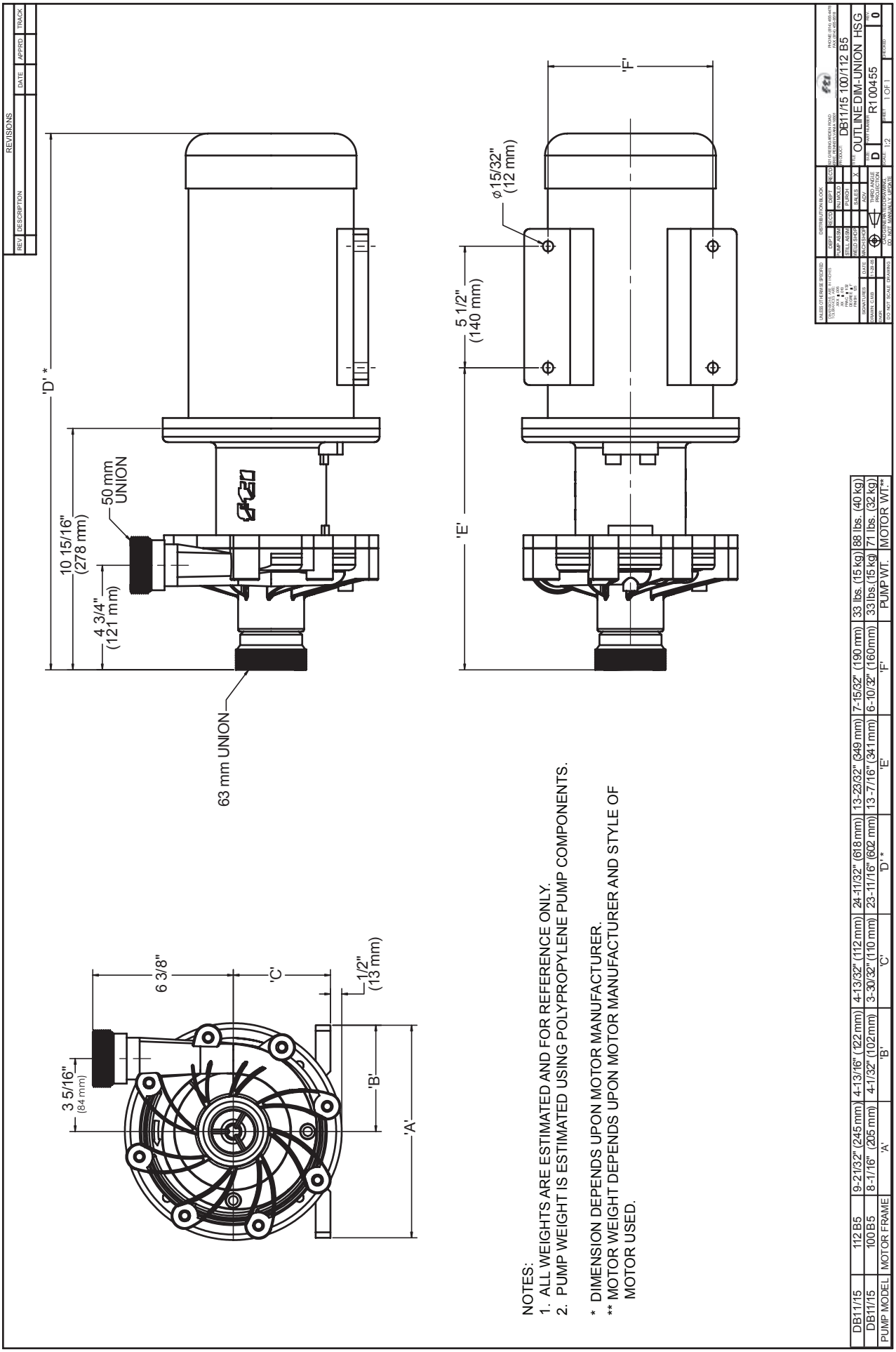

DB11/15 OUTLINE DIMENSIONS - FLANGE HSG - 100-112 FR B5 (R100456)

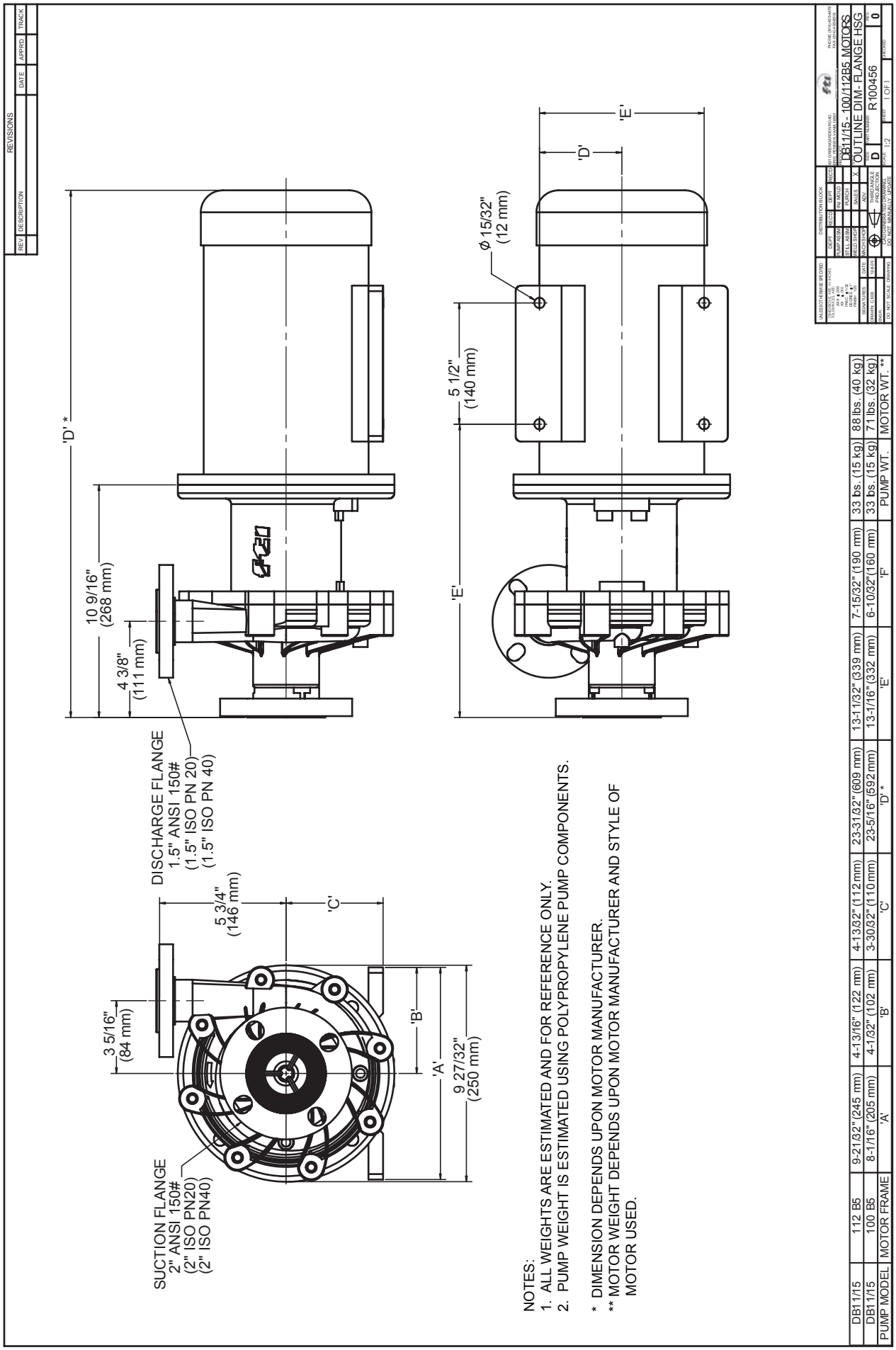

NOTES:
1. ALL WEIGHTS ARE ESTIMATED AND FOR REFERENCE ONLY.
2. PUMP WEIGHT IS ESTIMATED USING POLYPROPYLENE PUMP COMPONENTS.

* DIMENSION DEPENDS UPON MOTOR MANUFACTURER.
** MOTOR WEIGHT DEPENDS UPON MOTOR MANUFACTURER AND STYLE OF MOTOR USED.

DB11/15	112 B5	9-21/32" (245 mm)	4-13/16" (122 mm)	4-13/32" (112 mm)	23-31/32" (609 mm)	13-11/32" (339 mm)	7-15/32" (190 mm)	33 bs. (15 kg)	88 lbs. (40 kg)
DB11/15	100 B5	8-1/16" (205 mm)	4-1/32" (102 mm)	3-30/32" (110 mm)	23-5/16" (592 mm)	13-1/16" (332 mm)	6-10/32" (160 mm)	33 bs. (15 kg)	71 lbs. (32 kg)
PUMP MODEL	MOTOR FRAME	'A'	'B'	'C'	'D' *	'E'	'F'	PUMP WT.	MOTOR WT. **

DB22 Outline Dimensions - Threaded Housing

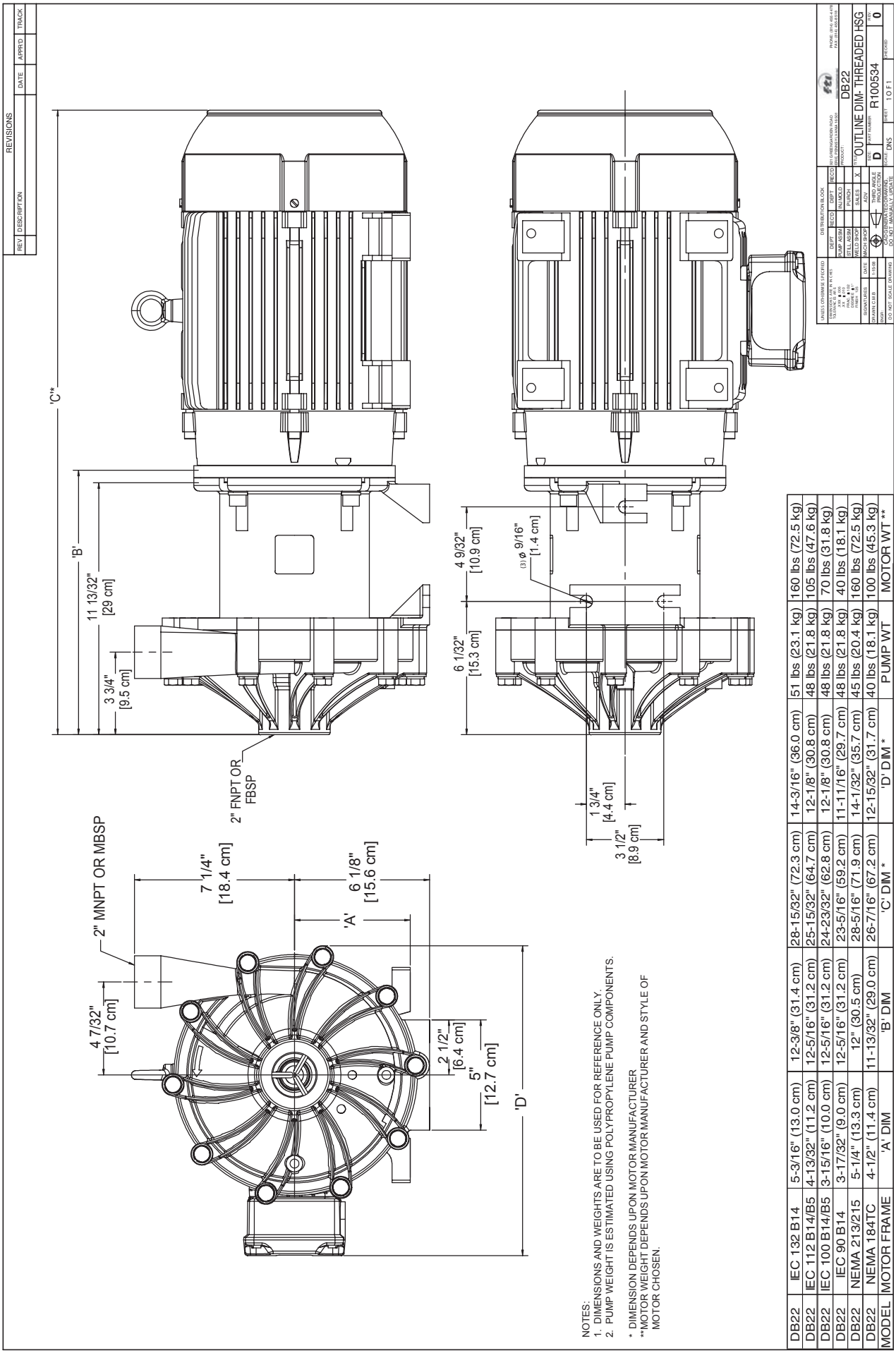

NOTES:
1. DIMENSIONS AND WEIGHTS ARE TO BE USED FOR REFERENCE ONLY.
2. PUMP WEIGHT IS ESTIMATED USING POLYPROPYLENE PUMP COMPONENTS.

* DIMENSION DEPENDS UPON MOTOR MANUFACTURER
**MOTOR WEIGHT DEPENDS UPON MOTOR MANUFACTURER AND STYLE OF MOTOR CHOSEN.

DB22	IEC 132 B14	5-3/16" (13.0 cm)	12-3/8" (31.4 cm)	28-15/32" (72.3 cm)	14-3/16" (36.0 cm)	51 lbs (23.1 kg)	160 lbs (72.5 kg)
DB22	IEC 112 B14/B5	4-13/32" (11.2 cm)	12-5/16" (31.2 cm)	25-15/32" (64.7 cm)	12-1/8" (30.8 cm)	48 lbs (21.8 kg)	105 lbs (47.6 kg)
DB22	IEC 100 B14/B5	3-15/16" (10.0 cm)	12-5/16" (31.2 cm)	24-23/32" (62.8 cm)	12-1/8" (30.8 cm)	48 lbs (21.8 kg)	70 lbs (31.8 kg)
DB22	IEC 90 B14	3-17/32" (9.0 cm)	12-5/16" (31.2 cm)	23-5/16" (59.2 cm)	11-11/16" (29.7 cm)	48 lbs (21.8 kg)	40 lbs (18.1 kg)
DB22	NEMA 213/215	5-1/4" (13.3 cm)	12" (30.5 cm)	28-5/16" (71.9 cm)	14-1/32" (35.7 cm)	45 lbs (20.4 kg)	160 lbs (72.5 kg)
DB22	NEMA 184TC	4-1/2" (11.4 cm)	11-13/32" (29.0 cm)	26-7/16" (67.2 cm)	12-15/32" (31.7 cm)	40 lbs (18.1 kg)	100 lbs (45.3 kg)
MODEL	MOTOR FRAME	'A' DIM	'B' DIM	'C' DIM *	'D' DIM *	PUMP WT	MOTOR WT **

DB22 Outline Dimensions - Union Housing

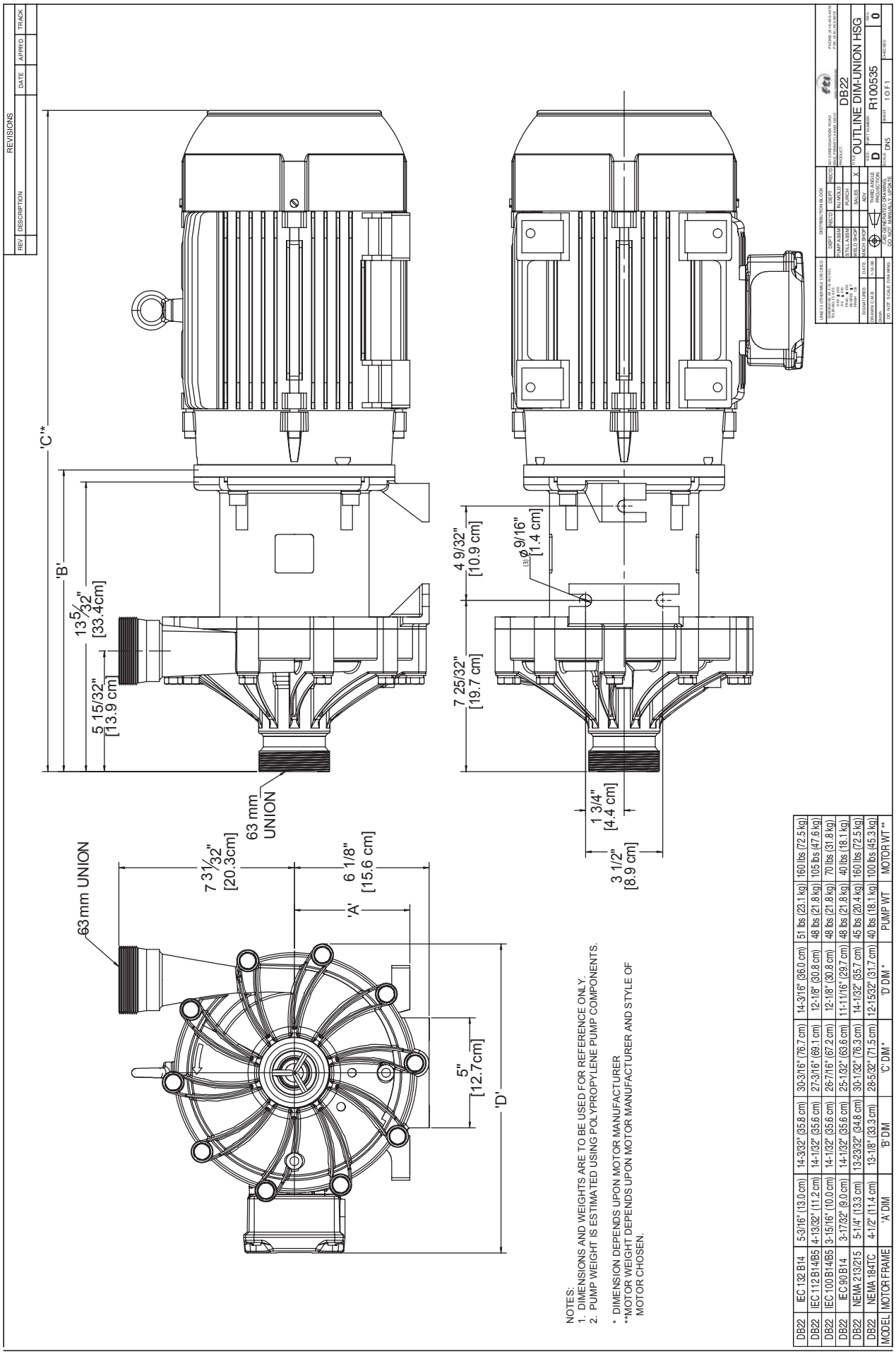

NOTES:
1. DIMENSIONS AND WEIGHTS ARE TO BE USED FOR REFERENCE ONLY.
2. PUMP WEIGHT IS ESTIMATED USING POLYPROPYLENE PUMP COMPONENTS.

* DIMENSION DEPENDS UPON MOTOR MANUFACTURER
**MOTOR WEIGHT DEPENDS UPON MOTOR MANUFACTURER AND STYLE OF MOTOR CHOSEN.

MODEL	MOTOR FRAME	'A' DIM	'B' DIM	'C' DIM *	'D' DIM *	PUMP WT.	MOTOR WT **
DB22	IEC 132 B14	5-3/16" (13.0 cm)	14-3/32" (35.8 cm)	30-3/16" (76.7 cm)	14-3/16" (36.0 cm)	51 lbs (23.1 kg)	160 lbs (72.5 kg)
DB22	IEC 112 B14/B5	4-13/32" (11.2 cm)	14-1/32" (35.6 cm)	27-3/16" (69.1 cm)	12-1/8" (30.8 cm)	48 lbs (21.8 kg)	105 lbs (47.6 kg)
DB22	IEC 100 B14/B5	3-15/16" (10.0 cm)	14-1/32" (35.6 cm)	26-7/16" (67.2 cm)	12-1/8" (30.8 cm)	48 lbs (21.8 kg)	70 lbs (31.8 kg)
DB22	IEC 90 B14	3-17/32" (9.0 cm)	14-1/32" (35.6 cm)	25-1/32" (63.6 cm)	11-11/16" (29.7 cm)	48 lbs (21.8 kg)	40 lbs (18.1 kg)
DB22	NEMA 213/215	5-1/4" (13.3 cm)	13-23/32" (34.8 cm)	30-1/32" (76.3 cm)	14-1/32" (35.7 cm)	45 lbs (20.4 kg)	160 lbs (72.5 kg)
DB22	NEMA 184TC	4-1/2" (11.4 cm)	13-1/8" (33.3 cm)	28-5/32" (71.5 cm)	12-15/32" (31.7 cm)	40 lbs (18.1 kg)	100 lbs (45.3 kg)

DB22 Outline Dimensions - Flange Housing

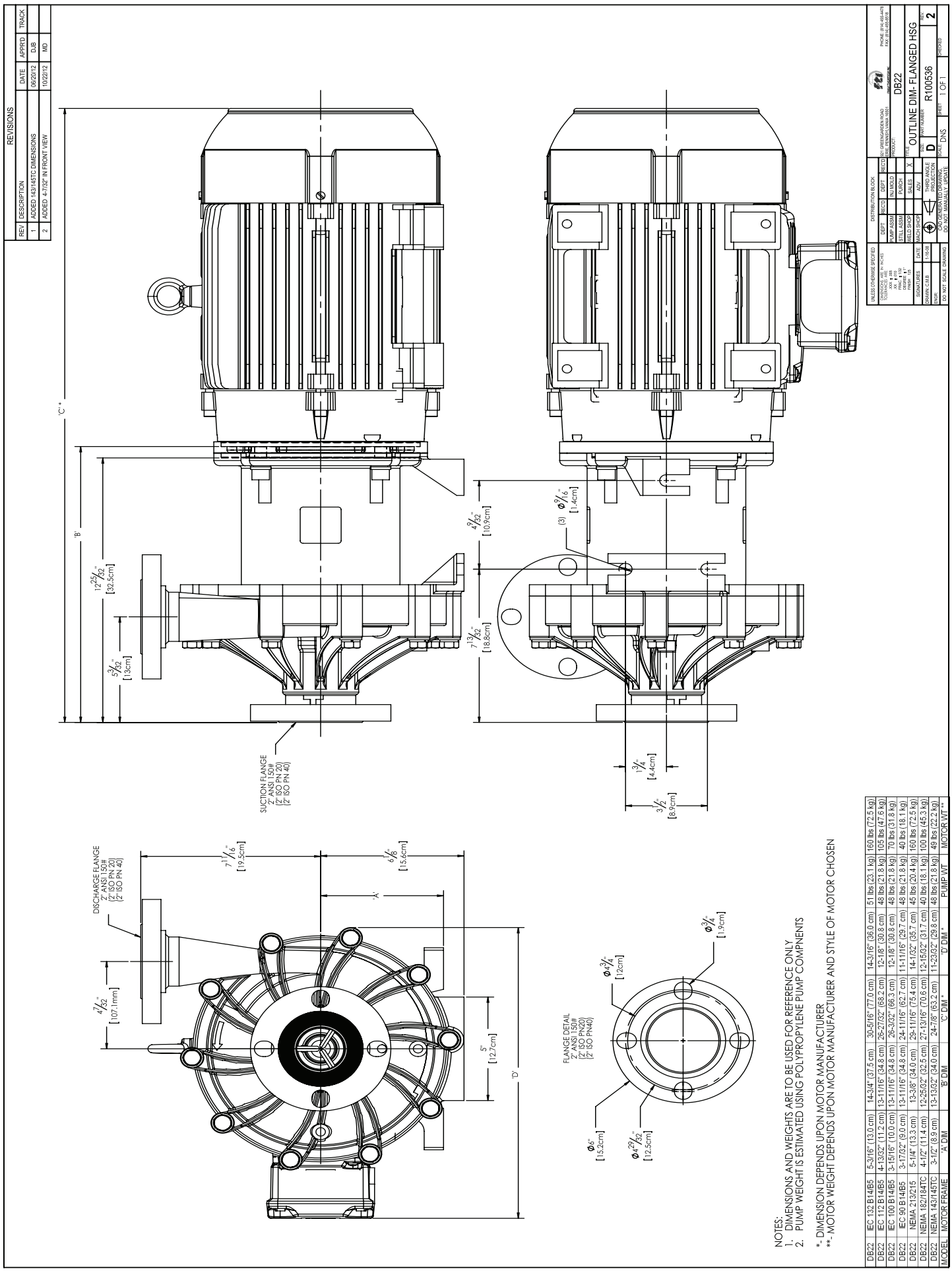

REVISIONS				
REV	DESCRIPTION	DATE	APPR'D	TRACK
1	ADDED 145 FRAME TO DIMENSION CHART	11/28/12	MD	
2	DRAWING PRODUCT & TITLEBLOCK UPDATED	10/29/13	MD	
3	ADDED JIS FLANGE NOTES	5/9/16	TDS	

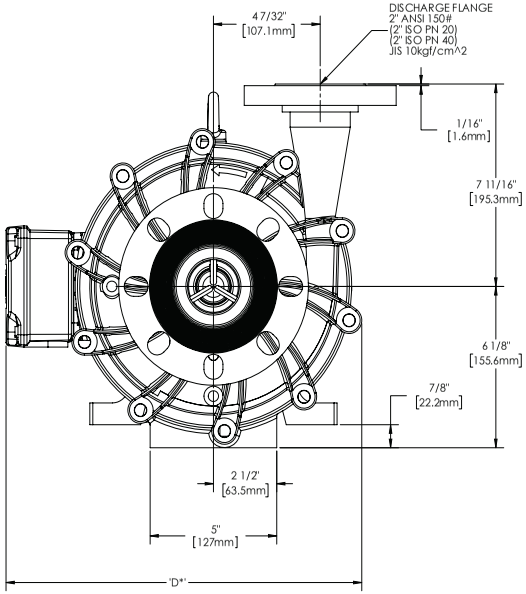

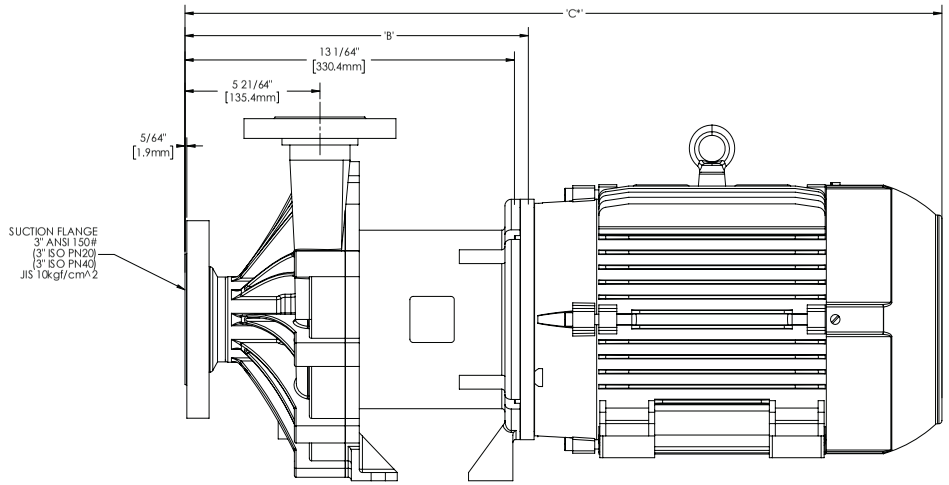

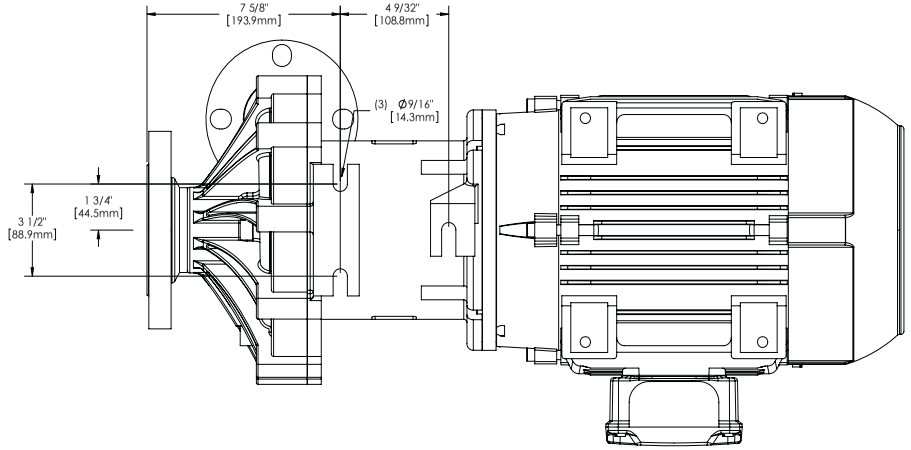

DISCHARGE FLANGE DETAIL

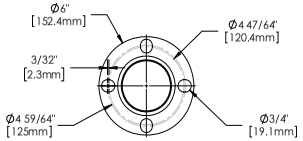

2" ANSI 150#
ISO PN20
ISO PN40
JIS 10kgf/cm^2

SUCTION FLANGE DETAIL

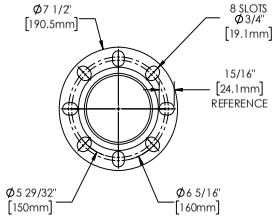

3" ANSI 150#
ISO PN20
ISO PN40
JIS 10kgf/cm^2

MODEL	MOTOR FRAME	DIM "A"		DIM "B"		DIM "C"*		DIM "D"*		PUMP WT		MOTOR WT**	
		IN	MM	IN	MM	IN	MM	IN	MM	LBS	KG	LBS	KG
DB32	IEC 132 B14/B5	5-3/16	132	14-15/16	379	30-1/2	775	14-3/16	360	51	23.2	160	72.6
	IEC 112 B14/B15	4-13/32	112	13-7/8	352	27-1/32	687	12-1/8	308	48	21.8	105	47.6
	IEC 100 B14/B5	3-15/16	100	13-7/8	352	26-9/32	668	12-1/8	308	48	21.8	70	31.8
	IEC 90 B14/B5	3-17/32	90	13-7/8	352	24-7/8	632	11-11/16	297	48	21.8	40	18.1
	NEMA 213/215TC	5-1/4	133	13-9/16	344	29-7/8	759	14-1/32	356	45	20.5	160	72.6
	NEMA 184TC	4-1/2	114	12-31/32	329	28	711	12-15/32	317	40	18.2	100	45.4
	NEMA 145TC	3-1/2	89	13-29/32	353	25-1/8	638	13-3/32	333	40	18.2	90	40.8

NOTES:
1. DIMENSIONS AND WEIGHTS ARE TO BE USED FOR REFERENCE ONLY
2. PUMP WEIGHT IS ESTIMATED USING POLYPROPYLENE PUMP COMPONENTS

* - DIMENSION DEPENDS UPON MOTOR MANUFACTURER
** - MOTOR WEIGHT DEPENDS UPON MOTOR MANUFACTURER AND STYLE OF MOTOR CHOSEN

UNLESS OTHERWISE SPECIFIED
DIMENSIONS ARE IN INCHES
TOLERANCES ARE:
.XX ± .005
.XX ± .010
FRAC ± 1/32
DEGREE ± 1°
FINISH 125

SIGNATURES	DATE
DRAWN:	10/22/12
ENGR:	
DO NOT SCALE DRAWING	

DISTRIBUTION BLOCK

DEPT	REC'D	DEPT	REC'D
PUMP ASSM		INJ MOLD	
STILL ASSM		PURCH	
WELD SHOP		SALES	X
MACH SHOP		ADV	

THIRD ANGLE PROJECTION
CAD GENERATED DRAWING
DO NOT MANUALLY UPDATE

921 GREENGARDEN ROAD
ERIE, PENNSYLVANIA 16501
PHONE: (814) 455-4478
FAX: (814) 455-8018

PRODUCT: DB22

TITLE: 3X2 OUTLINE DIMENSIONAL

SIZE: D | PART NUMBER: R100933 | REV: 3

SCALE: DNS | SHEET: 1 OF 1 | CHECKED